

GRIPSHORE™ SYSTEMS

AUSTRALASIAN DISTRIBUTOR

Hirepool SHORING

CONTACT

SOUTH ISLAND: SUE AUSTING 027 519 8304

NORTH ISLAND: LAURIE PEARCE 027 514 3909

WWW.SHORENZ.CO.NZ


GRiPSHORE™ load testing at UKAS accredited facility

Description

Simple to assemble, two sided hydraulic bracing systems designed to provide temporary support to small trenches for the safe installation of utilities.

The systems can support trench widths of 0.57m to 1.42m and can be installed by hand to depths of up to 2.2m.
Fabricated from pultruded GRP (grade E17/E23 to BS EN 13706 and fire retardant to ASTM E84 Class 1) the waler rails, sheets and boards are supported by aluminium trench-jacks using simple pin and retaining clip assemblies.
The trench jacks contain hydraulic rams with either 350mm or 525mm of stroke. Connecting the rams (via hydraulic hoses) to an MGF hand operated single acting bucket pump containing hydraulic shoring fluid allows the width of the bracing system to be quickly and easily adjusted to suit the trench dimensions.
Once the systems are located at the correct line and level, the trench jacks are pre-loaded against the trench sides using the bucket pump. Pre-loading the faces of the trench imparts compressive stresses within the soil which generate arched stress paths both vertically and horizontally between the trench jacks. The trench jacks are pre-loaded and provide rigid supports for the soil to arch to. Self-sealing quick release valves lock in the hydraulic ram pressure.

MGF can supply a full range of ancillaries including lightweight bucket pumps, handling slings, restraining chains, GRP Endsafe struts and GRP ladders.

Manufactured and designed in general accordance with the principles of BS EN 1465 Part 1 (manually operated shoring systems), BS 5975 (code of practice for temporary works) and the Federal OSHA Regulations.

GRiPSHORE™ is exclusive to MGF and is a fully registered design belonging to MGF. GRiPSHORE™ systems are patent registered, design registered and trademarked.

Product Notes

1. GRiPSHORE™ systems should only be installed and removed by competent persons in strict accordance with an MGF design & installation sequence.
2. Installation is normally carried out using the dig and install excavation method by lowering the assembled units to the correct installation level and pre-loading each jack in turn to ensure that the units are pressed firmly against the trench walls and cannot slip. Max pre-load pressure of 50Bar (750psi) must not be exceeded.
3. GRP products are not suitable for the dig and push excavation technique.
4. Ensure all quick release valves are functional and all strut pins in place and secured using the retaining clips provided prior to commencing works.
5. Individual waler rails and jacks should be visually inspected for damage, excessive deflection or loss of ram pressure prior to entering the excavation.
6. Units should always be installed square and plumb to the excavation walls ensuring the jacks bear directly onto firm soil. If this is not possible any gaps must be securely packed by using hardwood wedges or suitable compacted material to ensure pre-loading of the jacks imparts compressive forces into the soil.
7. Safe access/egress, edge protection (for personnel) and barrier protection (for plant) should always be considered.
8. Prior to removal of systems all hydraulic rams must be released and retracted and systems prised clear of the trench walls, to avoid the need for excessive extraction forces and to avoid damaging the jacks.
9. No matter how much care is taken during the installation and removal of GRiPSHORE™ systems some ground movement will occur in the areas immediately surrounding the excavation. Great care must be taken when specifying these systems for use adjacent to existing structures and services.
10. Ends of trench runs should always be battered back at a safe angle or Endsafe struts should be installed.
11. Avoid hot works in close proximity to GRP.
12. Ensure gloves and eye protection when handling GRP.
13. If stacking GRP products ensure they are supported at max. 1.0m centres with timber skids to avoid bending, and that items are strapped down for stability especially in high winds.
14. Robustness - GRP components must not be roughly handled, struck, driven into the ground or extracted under load.

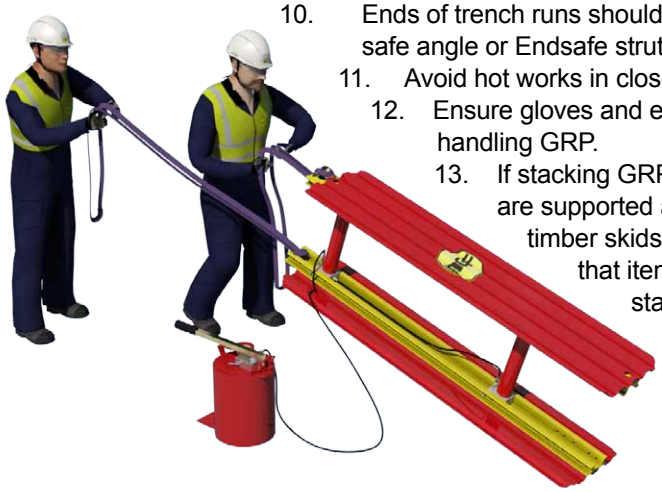



Product Notes

15. Suitable soils: made ground such as soft cohesive and loose granular fill which is generally self-supporting in the short term and where no ground water is present.
16. Unsuitable soils: ground such as very soft clays and silt or peat or in excavations where the trench walls are collapsing or groundwater is present.
17. Vertishore Rail Systems: Vertishore systems rely solely upon soil arching theory to support trench walls. Therefore never enter a trench unless fully pre-loaded vertishore rails are securely installed either side of the point of entry.
18. Box Systems: during installation and removal always ensure any operative in a trench is within fully assembled units extending vertically to the top of the trench.
19. Sheets and Walers: during installation and removal always ensure any operative in a trench greater than 1.0m deep is within fully assembled frames.
20. GRiPSHORE™ solutions are offered based on a competent person supervising the excavation and installation of the support systems. The competent person must be capable of confirming the soil conditions and local environment are suitable for the design, that the dimensions of the proposed excavation are suitable for the system deployed and that sufficient trench jacks are loading the soil prior to entry. If the proposed works deviate from the design and / or site conditions vary, immediately secure the excavation (back filling) and seek a re-design. If in doubt, please contact MGF DSL (01942 420704).
21. GRiPSHORE™ systems are designed to rely on trench jacks for overall stability, walers, sheets and boards/ panels are provided to spread the trench jack loads into the soil and prevent ravelling / local spalling of the trench walls between the jacks. The choice of system deployed will therefore depend upon a risk assessment of the proposed works. In general full sheeting / boarding would be advisable for longer duration works and/or where the trench wall stability for the duration of the proposed works is questionable (e.g. variable soils / extensive service crossings).
22. During installation and removal sequences assembled waler rails and boxes provide a short term safe working area for operatives when having to temporarily release individual jacks to lift or lower the systems. As a general rule it is safe to excavate up to 1000mm below a loaded jack during the installation sequence. Visit www.mgf.ltd.uk for examples of installation guides
23. GRiPSHORE™ systems are ideal for reactive type work which is short term in nature and has to cope with fast changing site constraints. It is therefore important that during this type of work the Temporary Works Supervisor is mindful of the Trench Jacking Theory Checks listed in this document and that the spacing rules in particular are obeyed.
24. Prior to loading a jack without a backing board it is essential that a min 500mm long even bearing is provided against the waler rail to avoid localised overloading of the soil.
25. Loading jacks against highway pavement construction (generally presenting very hard and uneven surfaces) can make installing jacks difficult. It is recommended that either the jacks are located so as to load the soil immediately beneath the pavement construction (recommended to batter the pavement back slightly in this case) or that the pavement construction is trimmed back and smoothed out to provide an even bearing and that timber blocks/ suitable fill is used to pack out where necessary to maintain an even loading of the trench walls.
26. Check trench service crossings for any soils or materials (including boulders, concrete or road construction) that could dislodge and fall/collapse onto operatives and if identified ensure that a jack is placed so as to prevent this or that an exclusion zone is established.
27. Do not work underneath service crossings unless an engineered support system is correctly installed or the service has been inspected and confirmed to be stable by a competent person.

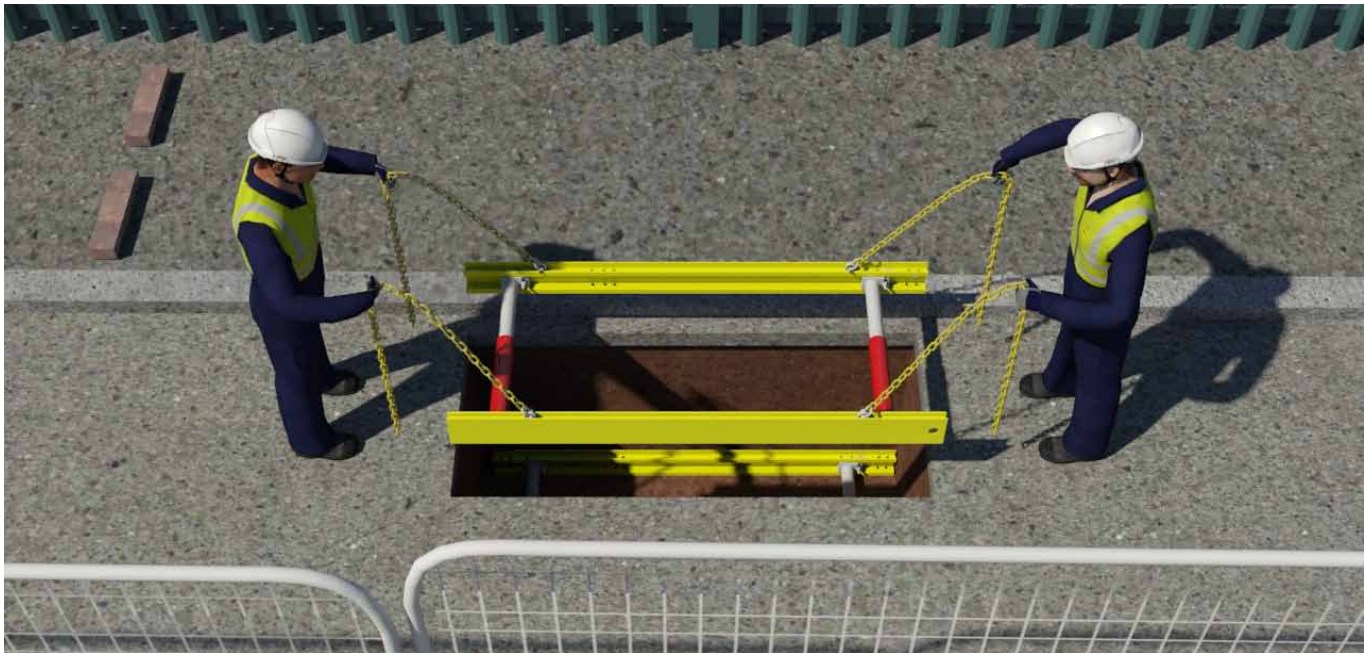

GRP Vertishore



GRP Vertishore with bonded backing board



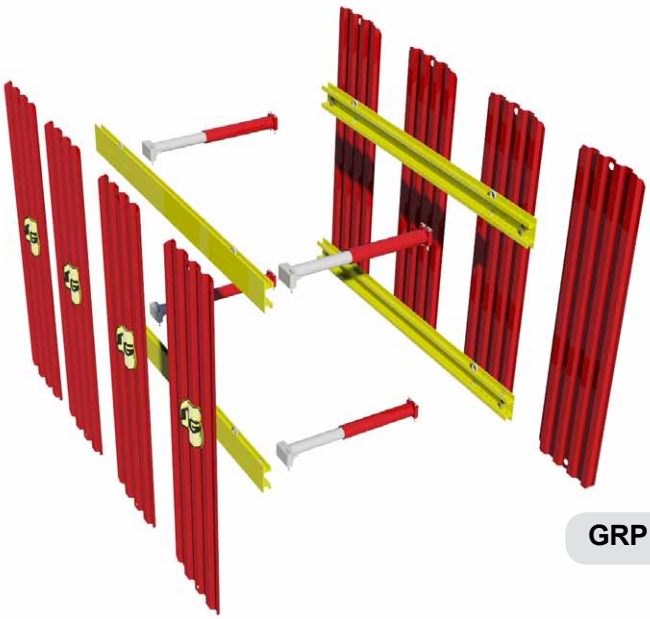

GRP Sheets and Walers

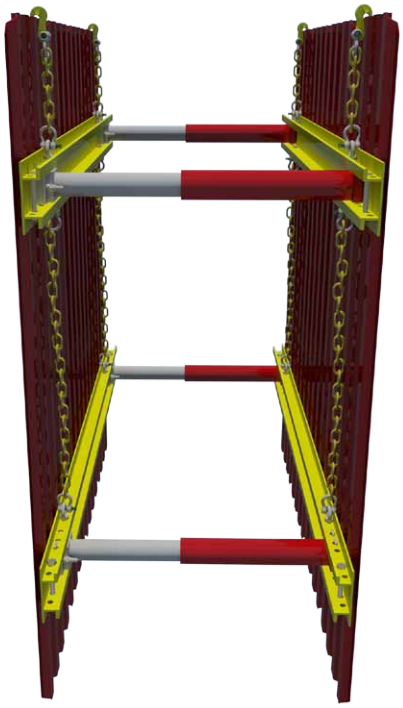

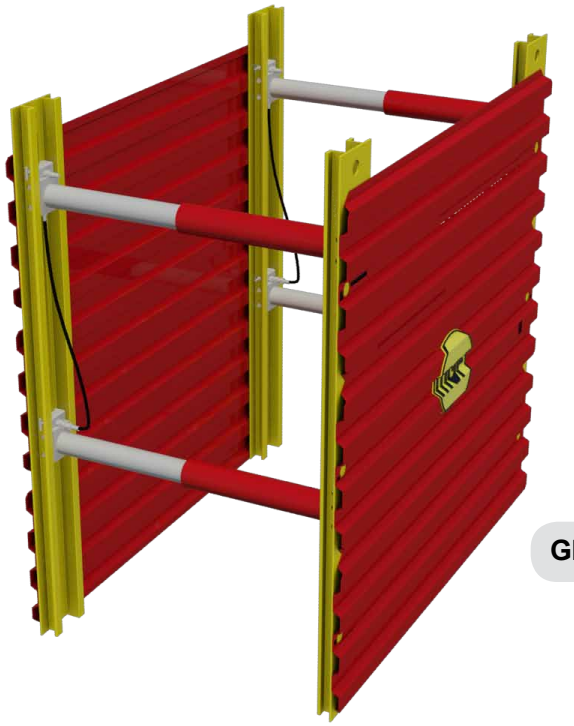

GRP Trench Box



GRP Modular Box

Trench Jacking Principles

Used in the United States for the last 50 years, soil arching or trench jack theory explains that when hydraulic struts pressurise the sides of an excavation that micro movements create compressive stresses into the soil that join together in an arch shape between hydraulic struts. This occurs in both the horizontal and vertical plane creating a protective area around the shoring system.
Only small amounts of earth within the soil arch can enter the trench, referred to as ravelling.
Trench walls must remain stable long enough for the trench jacks to be deployed and loaded.

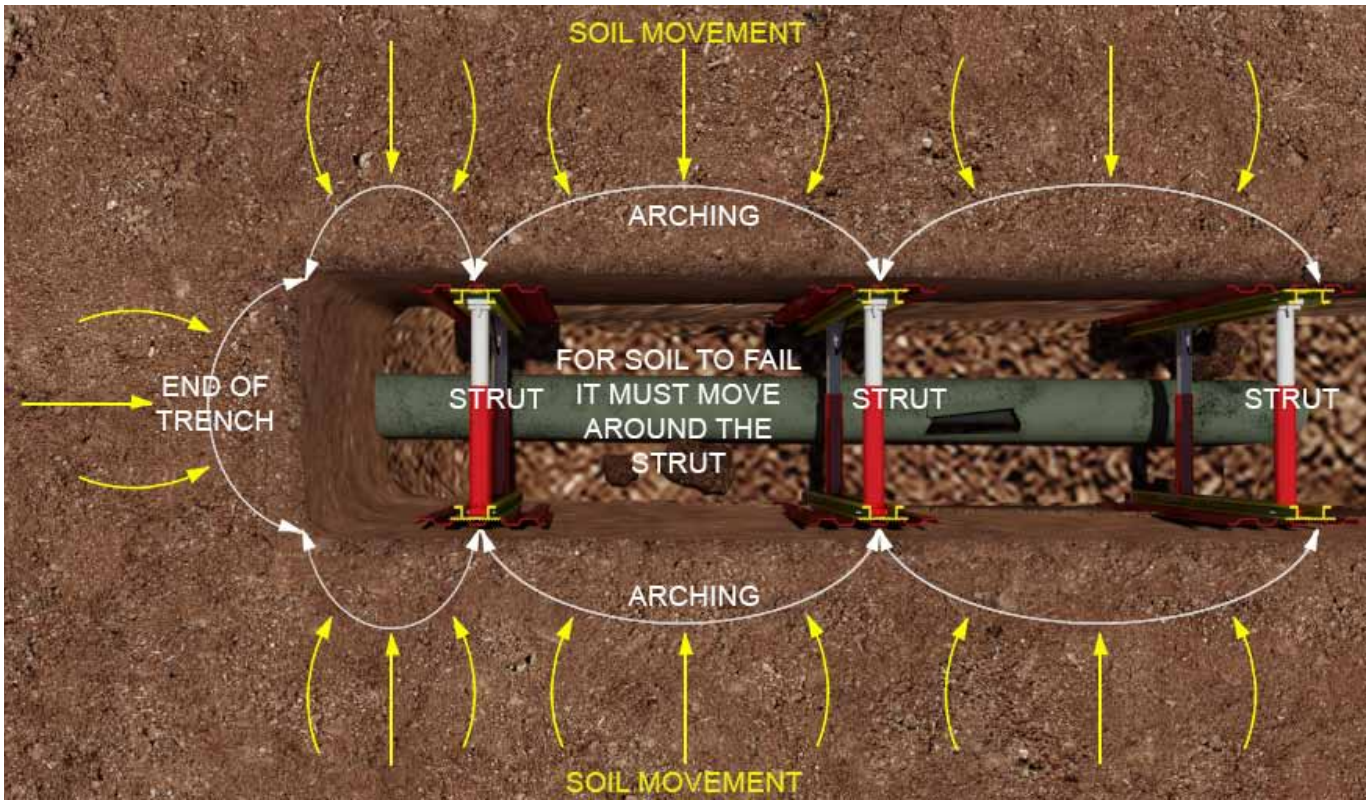

Do not extend the trench more than 0.5m beyond the rail

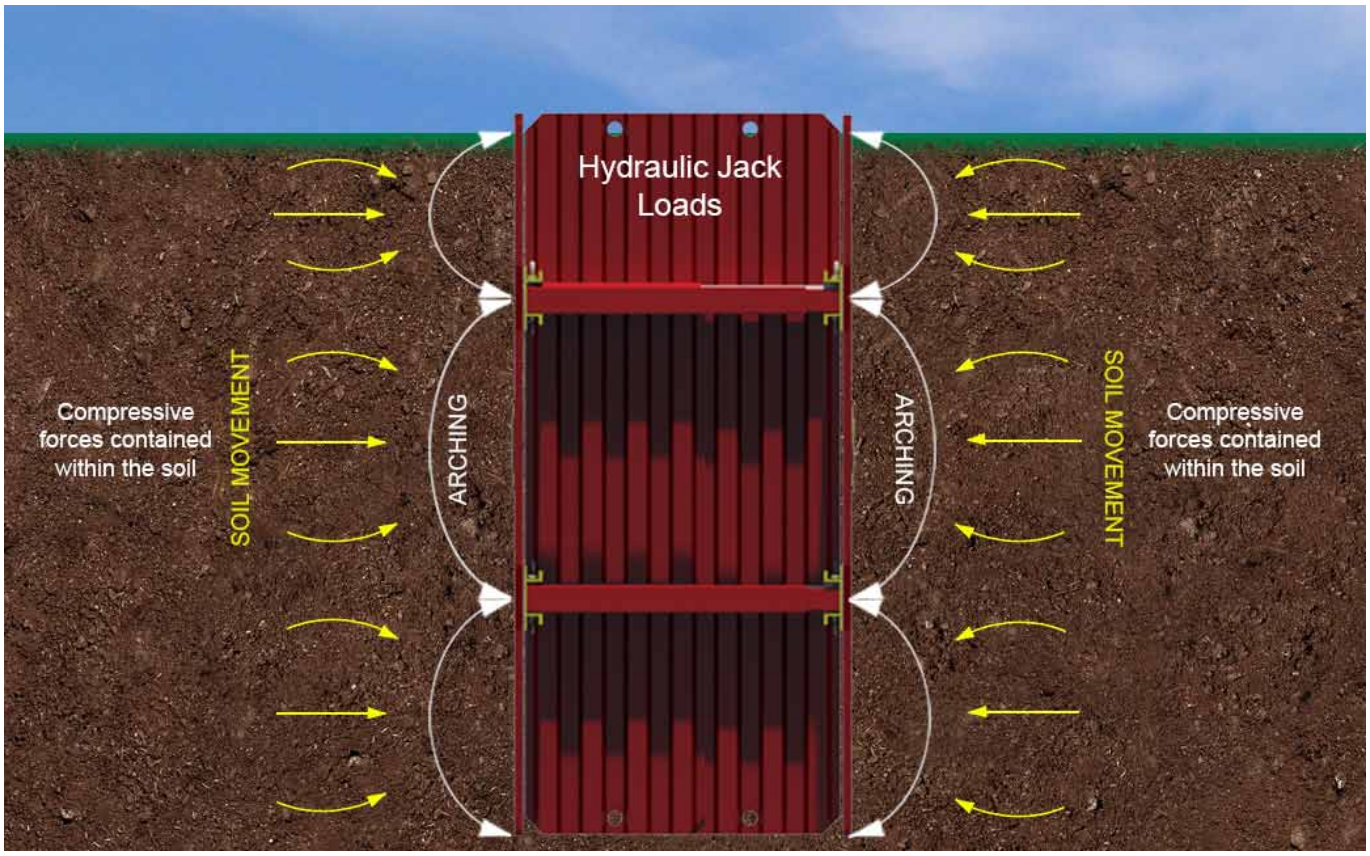

Trench Jacking Theory Checks

Excavation proportions

Trench Width >600 and <1400mm ☐

Trench Length >1.5 Width ☐ *(Trench lengths can be extended unsupported beyond jacks by up to 500mm)*

Trench Depth <2200mm ☐ *(This includes any reduced level dig or step / slope)*

Trench Jack Spacing

Top Jacks bearing onto soil >150mm and <600mm below surface ☐

Horizontal Jack spacing >600mm <2000mm ☐

Vertical jack spacing <1200mm ☐

*Bottom jacks max 600mm above dig depth** ☐

**This may be extended to 1000mm during installation and removal of box systems or subject to design checks*

Surcharging

Max 12t excavator, max 5kN/m^2 parallel to trench ☐

Trench Jack Recommended Pre-loads

Ground Type	Description	Recommended Pre Load
Made Ground	Loose fil	600psi
	Medium compacted fil	500psi
	Rock fill, well compacted hardcor	400psi
Clays	Very soft	DO NOT USE
	Soft	600psi
	Firm	500psi
	Stiff	450psi
	Very stiff	400psi
Gravels	Very loose	DO NOT USE
	Loose	600psi
	Medium dense	500psi
	Dense	450psi
	Very dense	400psi
Sand	Very loose	DO NOT USE
	Loose	750psi
	Medium dense	500psi
	Dense	450psi
	Very dense	400psi
	Slightly cemented	400psi
Organic	Peat / Silt	DO NOT USE

GRP Rail Profil

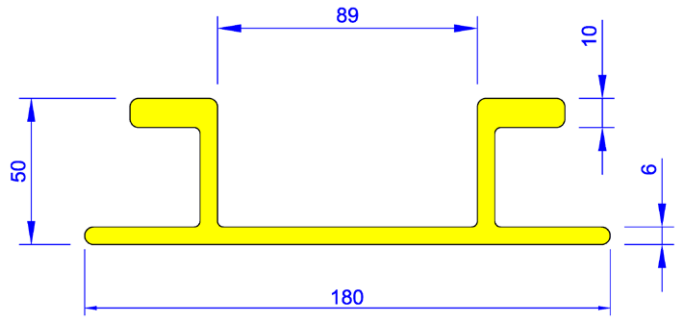

Type	GRP Rail
GRP Material Grade	E23
Weight	3.85kg/m
Section Modulus	23.5cm³
SWL Moment Capacity	3.42kNm *

* Subject to max. 1.7m simply supported span or 0.6m cantilever

GRP Panel/Sheet Profil

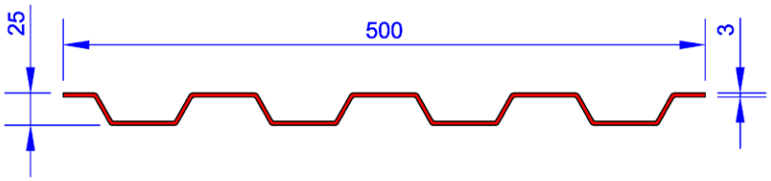

Type	GRP Panel/ Sheet
GRP Material Grade	E17
Weight	3.34kg/m
Section Modulus	27.4cm³/m
SWL Moment Capacity	3.14kNm/m **

** Subject to max. 1.5m simply supported span or 0.6m cantilever

GRP Hydraulic Ancillaries



The GRiPSHORE™ range utilise 2 different types of hydraulic trench jacks, Type A: 550 - 900mm (5.7kg) and Type B1: 850 - 1375mm (8kg).

Hydraulic Trench Jack	Single Acting
Material	Aluminium
Bore	50.8mm
Weight	5.7kg[1] / 8kg[2]
Axial SWL	60kN / 30kN***
Approx. Stroke	350mm[1] / 525mm[2]
Working Temp Range	-20ºC to +50ºC

[1] Type A Trench Jack [2] Type B1 Trench Jack

*** 30kN for Vertishore rail without bonded backing board



The pump is used to extend and retract the single acting hydraulic rams.
The pumps contain bio-degradable Houghto Safe SF25 shoring fluid. During the Summer months the shoring fluid is diluted with water at a ratio of 3 parts water to 1 part Houghto Safe SF25. In the Winter the mix ratio is 1:1.
Maximum recommended installation pressure 750psi (50 Bar).

Hydraulic Bucket Pump	Single Acting
Product ID	1.604
Capacity	10 litres
Shoring Fluid	Houghto Safe SF25
Installation Pressure	0-750 psi
Weight	12kg (empty)

GRP Sheets and Walers

The lightweight system can be rapidly assembled and installed by hand where access is limited, without the need for an excavator and without the requirement for operatives to enter an unsupported trench.
Endsafe struts are available to close off the ends of a trench providing extra protection from loose materials falling into the excavation (see page 7.11 for further details).
With a SWL of 16.5kN/m² the system is suitable for use in most trenches up to a depth of 2.0m (2.2m subject to design checks).

Product Description	Product ID	Weight (kg)
1.6m GRP Waler	1.090	6.2
2.1m GRP Waler	1.100	8.1
1.5m GRP Sheet	3.006	5.0
2.0m GRP Sheet	3.007	6.7

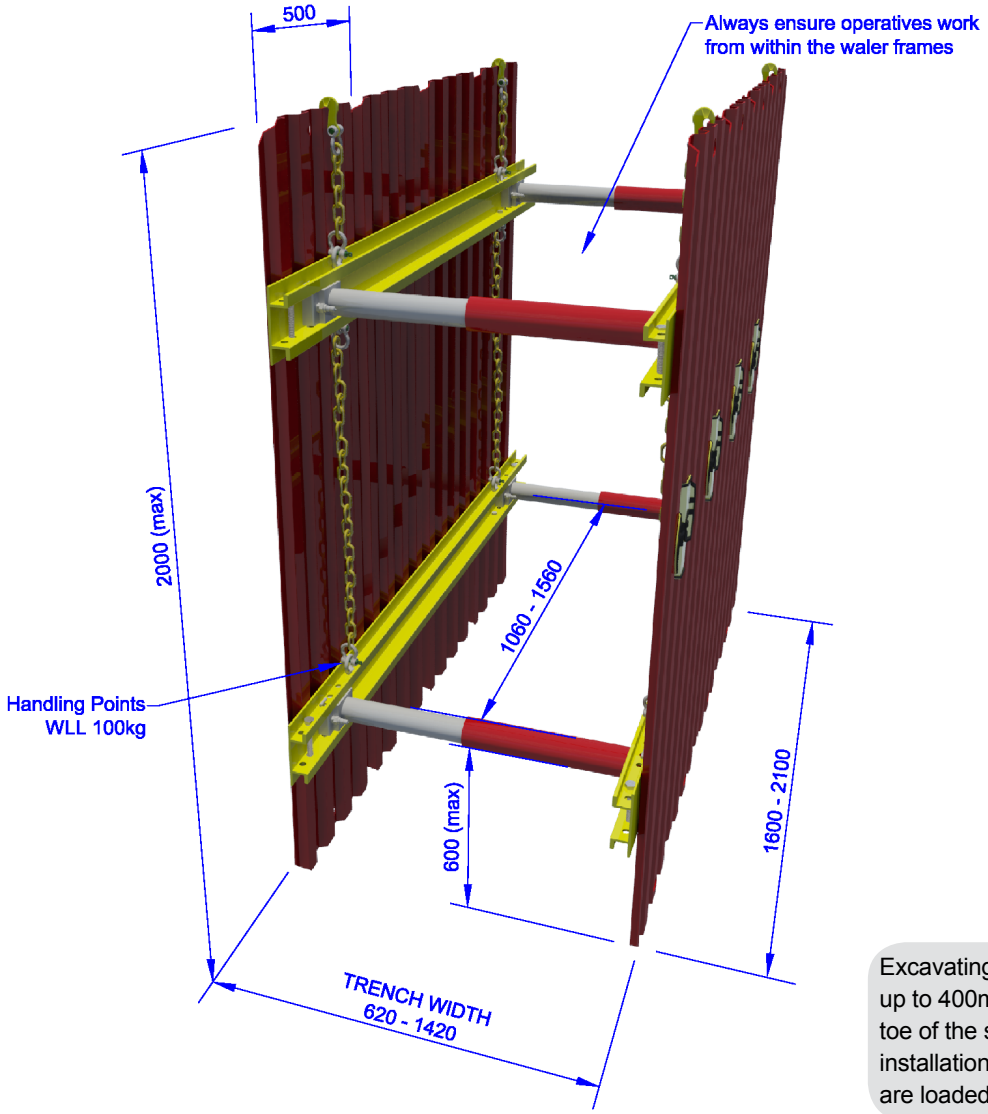

Excavating can continue up to 400mm below the toe of the sheet during installation provided jacks are loaded.

System SWL	16.5kN/m²
Max Trench Depth	2000mm*
Trench Width	620mm - 1420mm
Max understrut clearance	600mm
Clearance between struts	1060mm[1] / 1560mm[2]
Assembled Frame Weight	24kg[1] / 28kg[2]

[1] 1600mm GRP Waler [2] 2100mm GRP Waler
* Max. 2200mm subject to design checks
Assembled weight based on Type A Struts

GRP Vertishore Rail with or without bonded backing board

The lightweight system can be rapidly assembled and installed by hand where access is limited, without the need for an excavator and without the requirement for operatives to enter an unsupported trench.
MGF recommend a minimum of 3 units be installed at once and that operatives only work between loaded Vertishores.
The system provides a minimum 570mm of clearance below the bottom strut.
MGF recommend that any unsupported trench ends do not extend greater than 0.5m beyond the systems. With a trench jack SWL of 30/60kN suitable for use in most trenches up to a depth of 2.0m (2.2m subject to design checks). The trench jacks are linked by hydraulic hoses allowing safe install and removal from outside the trench.

Product Description	Product ID	Weight (kg)
0.5m Vertishore Rail	1.060	1.9
1.6m Vertishore Rail	1.070	6.2
1.6m Vertishore Rail w/ Bonded Board	1.075	12.5
2.1m Vertishore Rail	1.080	8.1
2.1m Vertishore Rail w/ Bonded Board	1.085	16.1

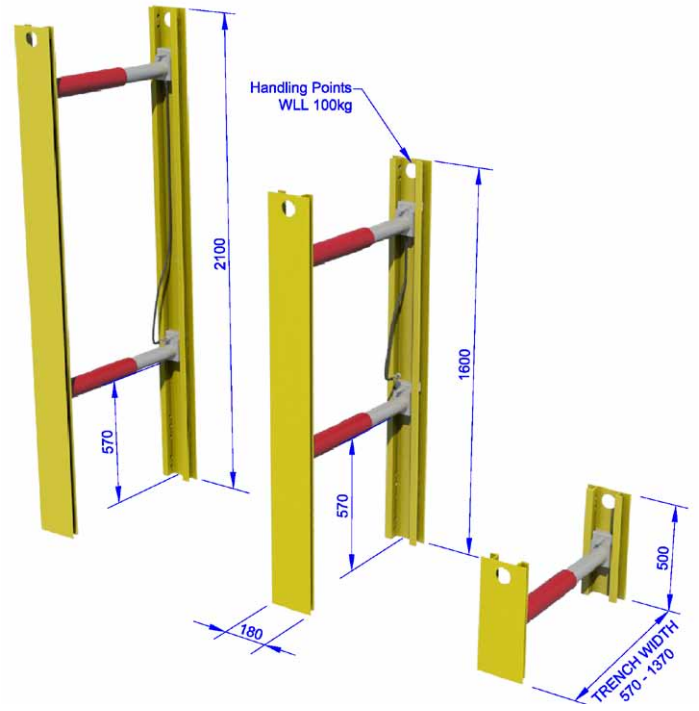

Max. spacing between installed Vertishores (without backing board) is 1.5m centre to centre.

Max. spacing between installed Vertishores (with bonded backing board) is 2.0m centre to centre.

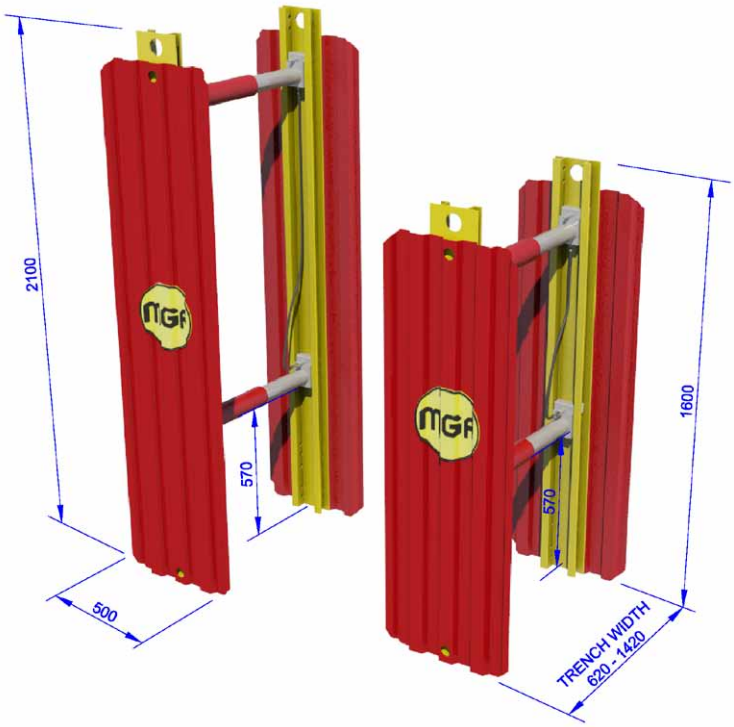

Backing Board Width	500mm
Max Trench Depth	2000mm*
Trench Width	570mm - 1420mm
Max understrut clearance	570mm
Strut SWL	30kN[1] / 60kN[2]
Assembled Weights	9.5 - 27.6kg[1] / 36.4 - 44kg[2]

[1] Without backing board [2] With backing board
* Max. 2200mm subject to design checks
Assembled weight based on Type A Struts

GRP Trench Box

The Lightweight system can be rapidly assembled by hand.
MGF recommend that any unsupported trench ends do not extend greater than 0.5m beyond the systems. With a trench jack SWL of 60kN suitable for use in most trenches up to a depth of 1.5m (1.7m subject to design checks). The trench jacks are linked by hydraulic hoses allowing safe install and removal from outside the trench.
The system provides a minimum 570mm of clearance below the bottom strut. Boxes are generally not suitable for use in trenches with numerous service crossings.
SWL = 16.5kN/m²

Product Description	Product ID	Weight (kg)
GRP Trench Box Panel	**4.002**	**27.3**

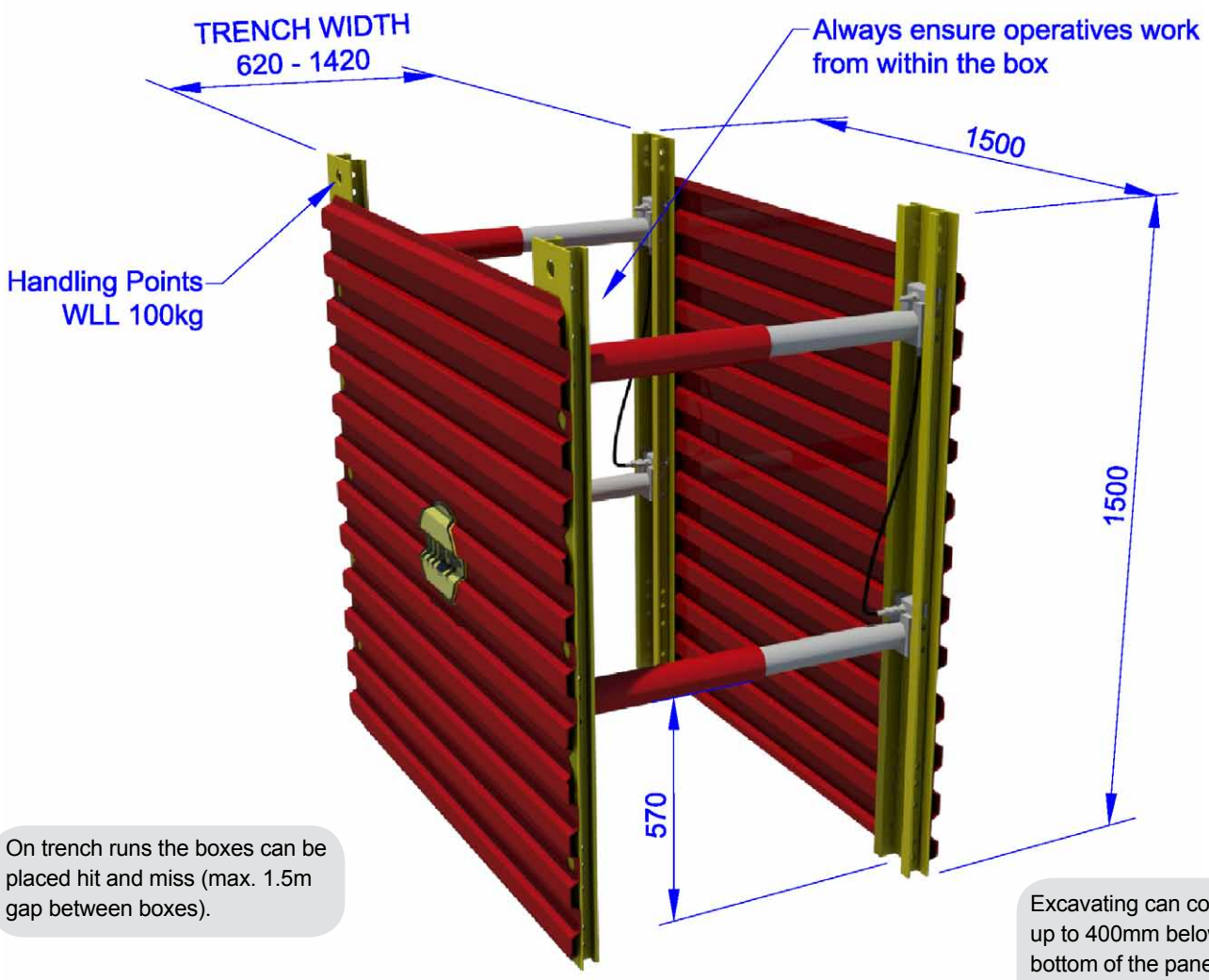

On trench runs the boxes can be placed hit and miss (max. 1.5m gap between boxes).

Excavating can continue up to 400mm below the bottom of the panel during installation provided jacks are loaded.

Panel L x H	**1500mm x 1500mm**
System SWL	**16.5kN/m²**
Max Trench Depth	**1500mm***
Trench Width	**620mm - 1420mm**
Max understrut clearance	**570mm**
Strut SWL	**60kN**
Clearance between struts	**1244mm**
Assembled Weight	**78kg**

* Max. 1700mm subject to design checks
Assembled weight based on Type A Struts

GRP Modular Box

A lightweight, modular shoring solution for excavations up to 2.0m deep (2.2m subject to design checks) with widths from 620mmm to 1420mm. GRP Modular Box panels create a working area 1.5m wide and a minimum under strut clearance of 570mm to allow services to pass. Due to the soil arch created by the hydraulic struts, GRP Modular Boxes can be set out with a clear space of up to 1.5m between boxes making an efficient solution for longer trench runs.
Designed to withstand a maximum safe working load of 16.5kN/m², for use in made ground such as soft cohesive and loose granular fill which is generally self-supporting in the short term and where no ground water is present. Boxes are generally not suitable for use in trenches with numerous service crossings.
To assist with installation tubular GRP connecting poles can be provided upon request.

Product Description	Product ID	Weight (kg)
GRP Modular Box Panel	4.001	19
GRP Modular Box Connecting Pole	4.003	2

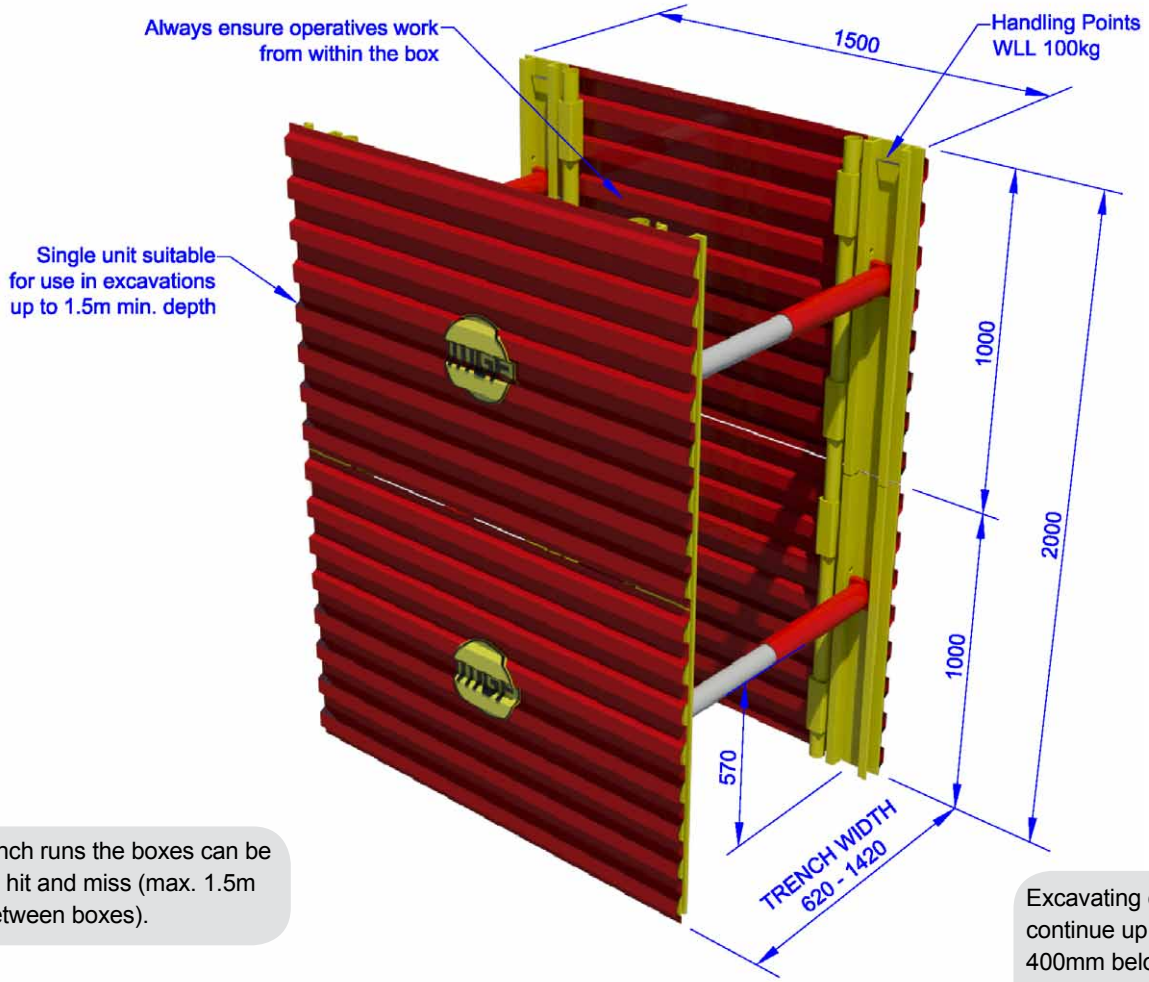

On trench runs the boxes can be placed hit and miss (max. 1.5m gap between boxes).

Excavating can continue up to 400mm below the bottom of the panel during installation provided jacks are loaded.

Panel L x H	1500mm x 1000mm
System SWL	16.5kN/m²
Max Trench Depth	2000mm*
Trench Width	620mm - 1420mm
Max understrut clearance	570mm
Strut SWL	60kN
Clearance between struts	1244mm
Assembled Weight	50kg per unit

* Max. 2200mm subject to design checks
Assembled weight based on Type A Struts

GRP Endsafe Struts

GRP Endsafe Struts are designed to be quickly and easily installed by hand to support the open end of a trench run created using GRP Sheets and Walers. When the Endsafe struts are installed the GRP trench sheets can be installed against the face of the GRP Endsafe strut by carefully lowering down vertically.
The struts are telescopic and include one outer section and a range of inner sections to give a working range of between 620mm and 1420mm. The minimum overlap between the inner and outer sections must not be less than 125mm.

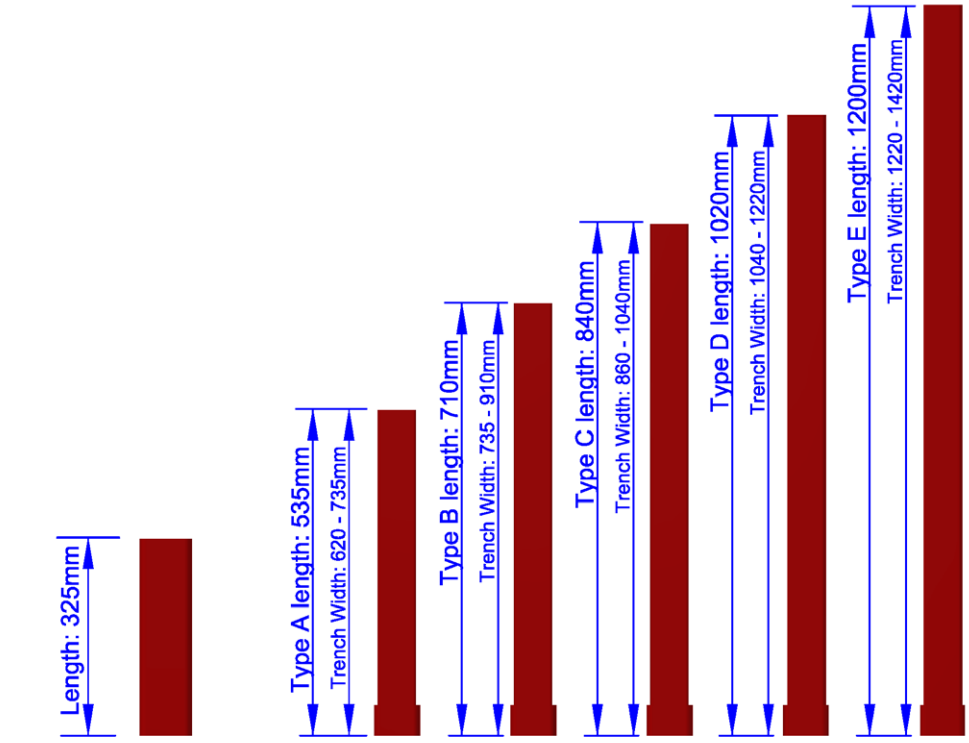

Component	Product ID	Weight
325 Outer	1.706	1.7kg
535 Inner	1.707	1.6kg
710 Inner	1.708	2.1kg
840 Inner	1.709	2.5kg
1020 Inner	1.710	3.0kg
1200 Inner	1.711	3.5kg

SWL	15kN/m
Inner Material	64x64x6.4 GRP SHS (E23)
Outer Material	86x86x10 GRP profiled sectio
Overall Weight	3.3kg - 5.2kg



GRP Vertishore - 0.5m Vertishore

The 0.5m long GRP Vertishore is intended to be used in shallow trenches where the layout of the excavation or obstructions such as services precludes the use of larger products. It can also be used to provide additional shoring support to the battered ends of trenches, avoiding the need for Endsafe struts or in conjunction with trench sheets and panels.
In trenches of 1.5m deep and beyond ensure that a minimum of 4No. loaded jacks are in place, 2 either side of the point of entry.
Setting out for 0.5m Vertishores must be done in strict accordance with Trench Jack Spacing Rules (see page 7.5).

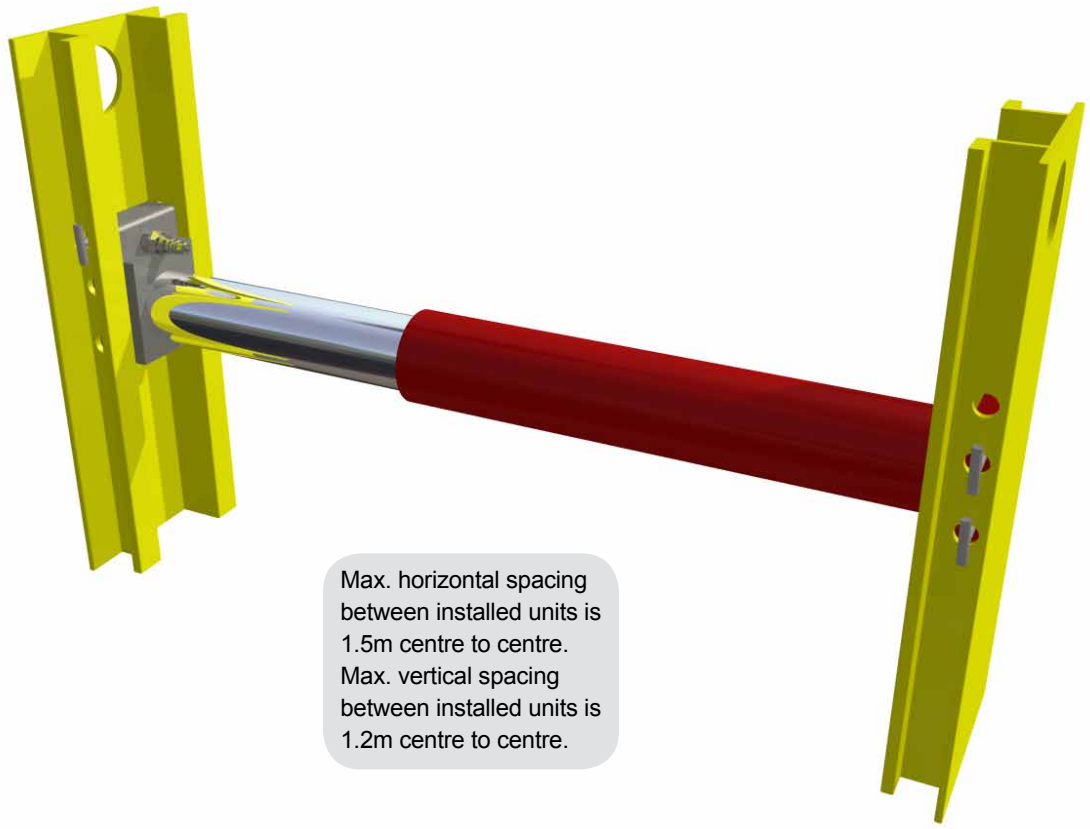

Max. horizontal spacing between installed units is 1.5m centre to centre.
Max. vertical spacing between installed units is 1.2m centre to centre.

GRP Vertishore - Alternate Configuration

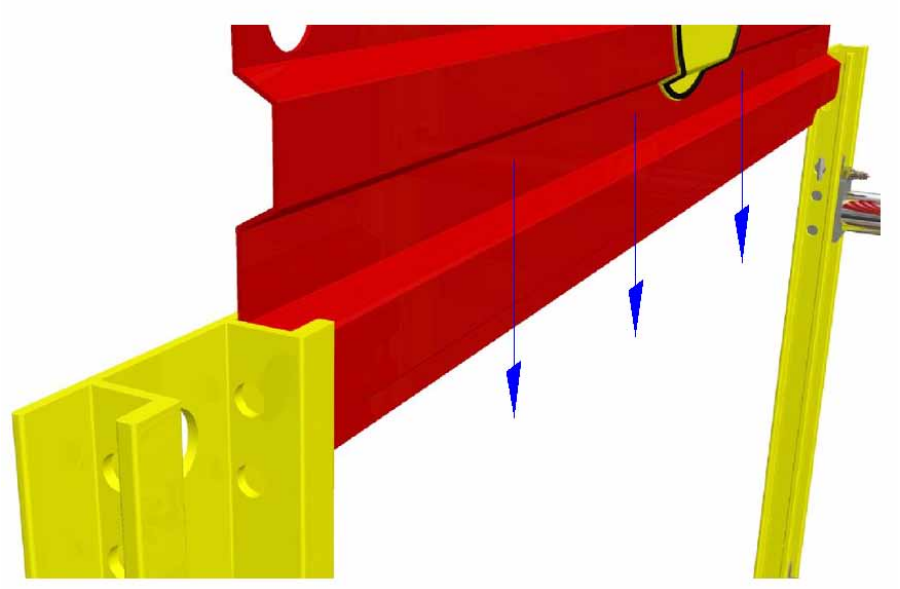

GRP Vertishore can also be installed as a hybrid system. If the trench is shored using Vertishore rails but the ground inbetween the units is found to be unstable, the product allows you to retrospectively slot GRP panels into the side grooves of the walers to protect the operative from loose materials whilst carrying out a repair.

GRiPSHORE Lifting / Handling Accessories

Chains

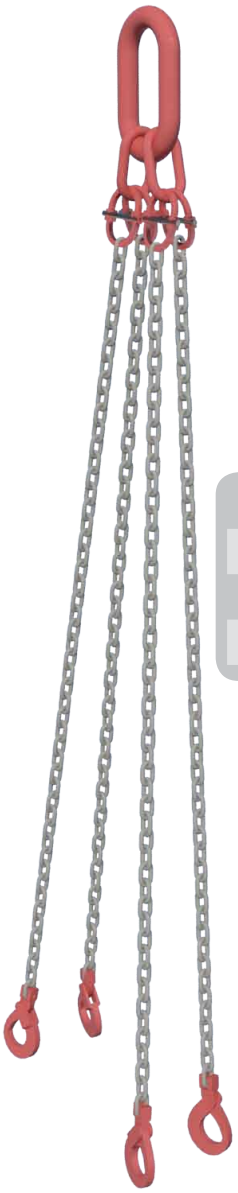



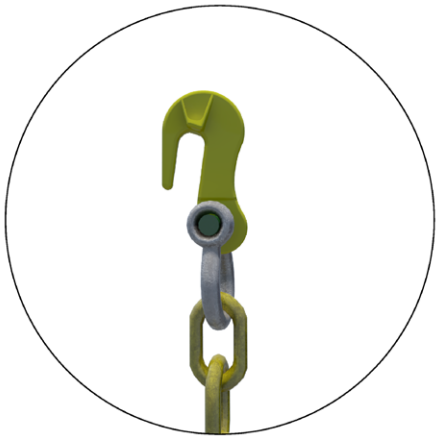



Product Description	WLL (Te)	Length (m)	Weight (kg)
4 Leg Handling Chain	3.0	1.2	8.3
Restraining Chain (hook)	0.47	1.2	2.0
Restraining Chain (shackle)	0.47	1.2	1.75



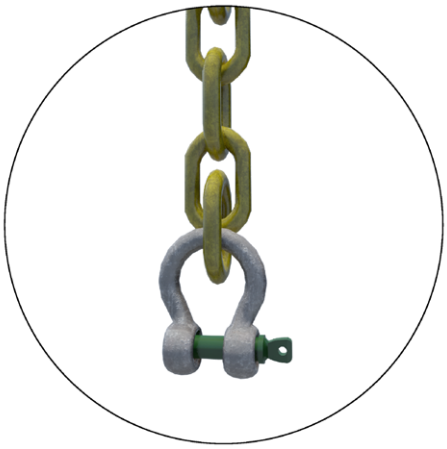

Slings

MGF can provide 1Te endless round slings to assist with the installation and removal of GRiPSHORE™. The slings are simply looped through the handling holes / lifting points on the GRiPSHORE™ units.

