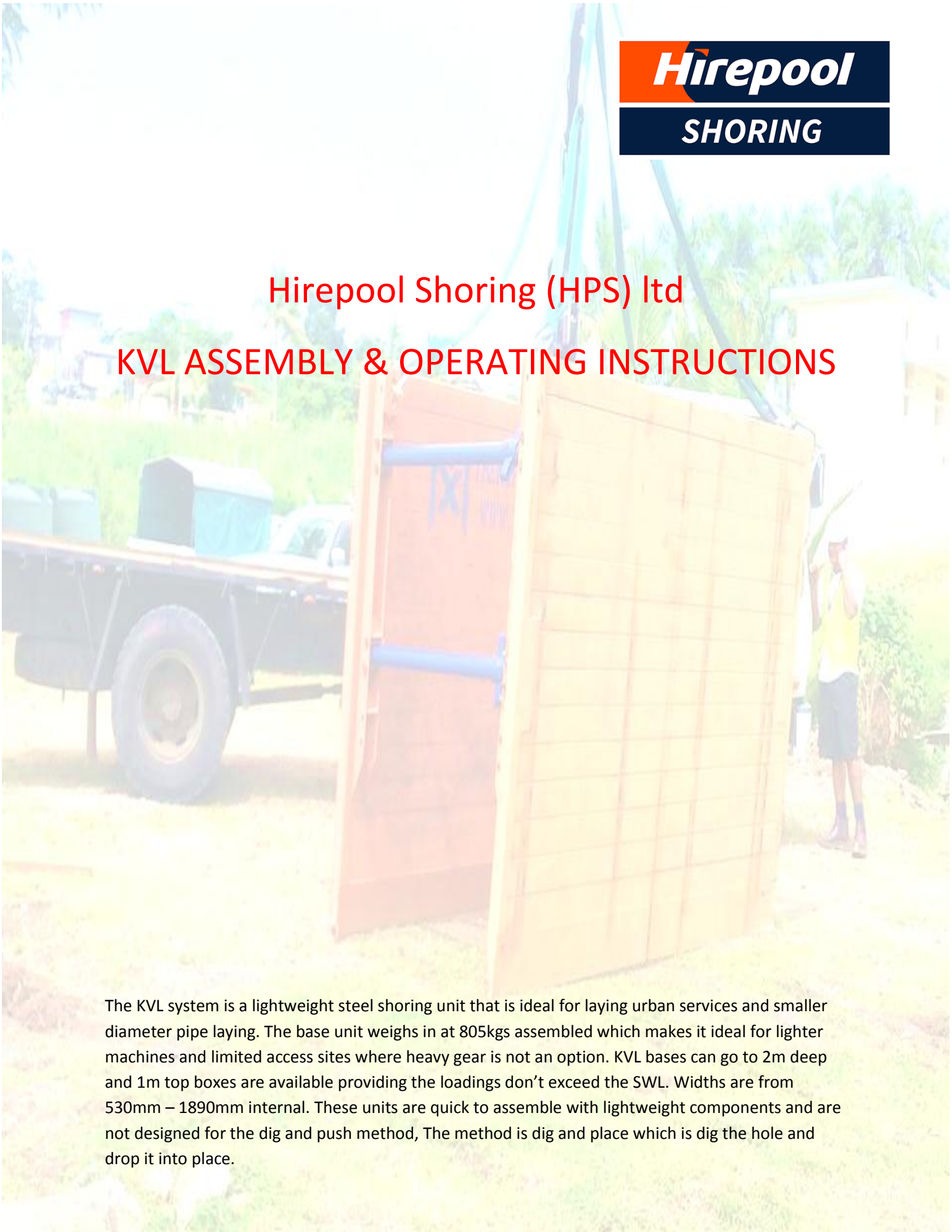

Hirepool Shoring (HPS) ltd

KVL ASSEMBLY & OPERATING INSTRUCTIONS

The KVL system is a lightweight steel shoring unit that is ideal for laying urban services and smaller diameter pipe laying. The base unit weighs in at 805kgs assembled which makes it ideal for lighter machines and limited access sites where heavy gear is not an option. KVL bases can go to 2m deep and 1m top boxes are available providing the loadings don't exceed the SWL. Widths are from 530mm – 1890mm internal. These units are quick to assemble with lightweight components and are not designed for the dig and push method, The method is dig and place which is dig the hole and drop it into place.

Safety

Lifting, handling, pulling, dragging

Component weights are not stamped on our gear as the weights can vary, these weights are on the packing list provided with your order.

Handling should be carried out as close to the ground as possible.

Only lift from the lifting points, never lift or drag by the struts they will bend and will need to be replaced and the cost recovered.

Lifting chains must be chosen to suit the weight being handled and must be certified.

To prevent the accidental detachment of the load use only load hooks with safety catches.

The load must be slung in such a way that the shoring is kept in a horizontal position and swinging is kept to a minimum. Use a tag line to control the movement of gear.

Do not stand within the pivoting range of the excavator or crane or beneath suspended loads.

A load operator must stand to the front of the excavator and be in eye contact with the machine operator.

Checklist:

- Am I trained for the task?
- Am I wearing the correct PPE (Personal Protective Equipment) for this task?
- Do I require assistance from a licensed machinery operator- eg cranes?
- Do I have the correct tools for the task?
- What are the safety devices being used on site – eg chains etc?
- Is the work area cleared of debris, tools etc?

Measures to reduce hazards

The safety of persons on site is paramount and should be enhanced with the aid of appropriate signs, cones, warning tapes and safety staff trained and deployed for the purpose of preventing accidents.

The risk of instability as a consequence of wind loads when setting up or using shoring must be considered.

Shoring must be secured against accidental impacts and set up in an area of sufficient size and on firm ground.

Care must be taken to look out for and avoid contact with overhead cables when handling, installing and removing shoring.

Where the ground is sloping or uneven, the shoring should be set up, if possible, at right angles to the slope.

Damages on site

The contractor must notify TSNZ of any damage ASAP; TSNZ will assess the damage and advise whether it is safe to continue using the item. Repairs must be carried out by TSNZ or carried out by another party only when in authorised in writing by TSNZ.

Loadings

Ensure that the loadings don't exceed the Limit State Design load for the system, which for the KVL 3m long x 2m deep base box is 27.2kNm² and the 3m x 1m deep top box Long Box is 32kNm²

Strut sizes available

TYPE A 530 -630mm

TYPE B 620 – 820mm

TYPE C 800 – 1170mm

TYPE D 1160 -1890mm

Step 1,
Lay the first panel on flat even ground with the channel facing up.

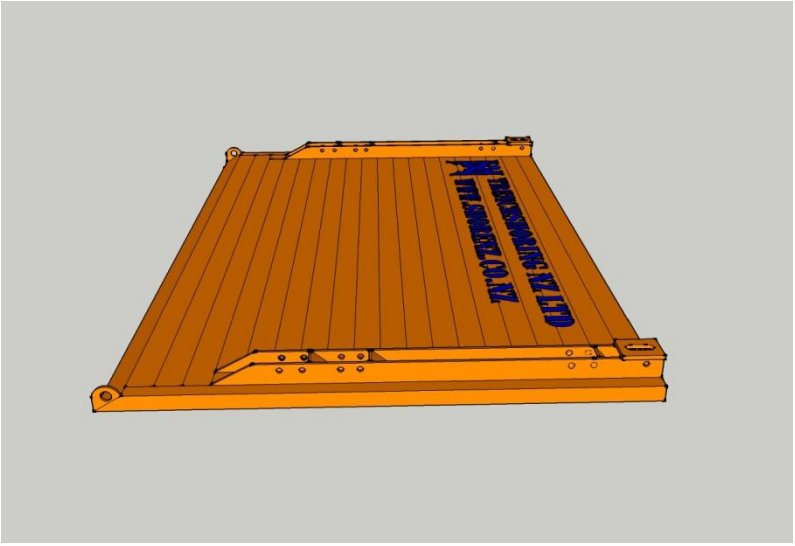

Step 2,
Put 4 x KVL struts into the panel as shown

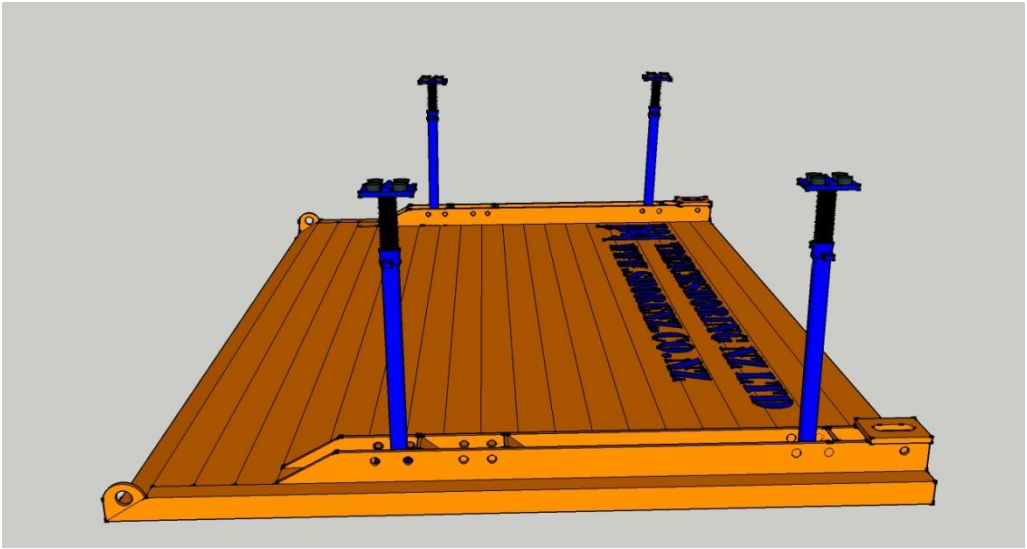

Step 3,
Put 20mm pins into the holes either side of the struts and secure with clips provided.

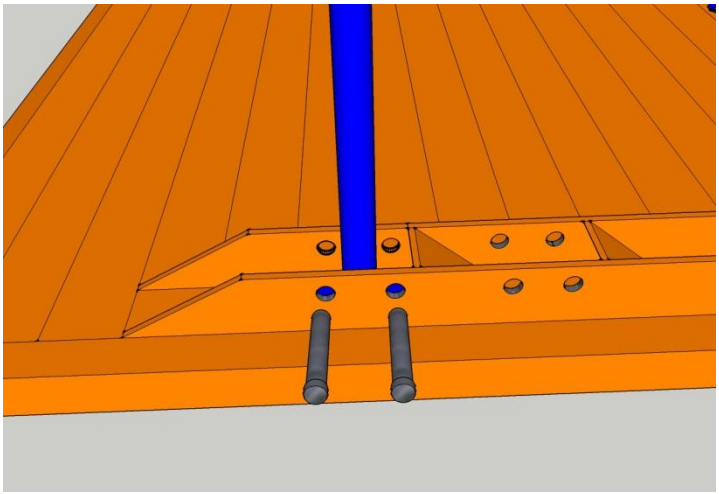

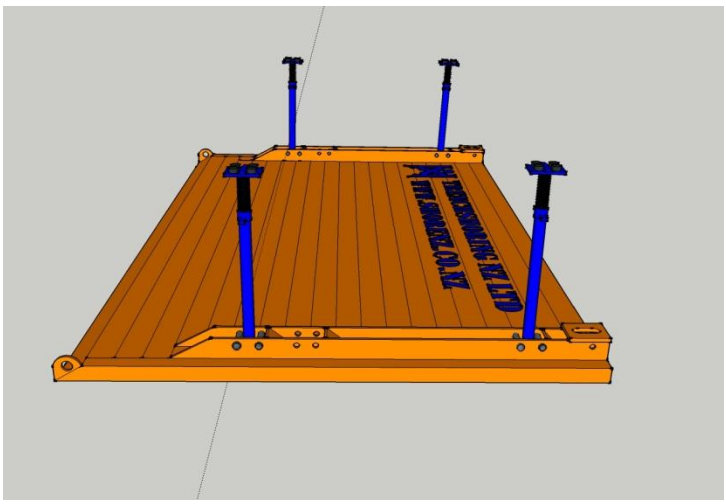

Step 4,

Lift up the 2nd panel and place it so it sits just above the struts. Wind the struts so that they go up into the panel, this is easier than trying to drop the panel onto all 4 struts.

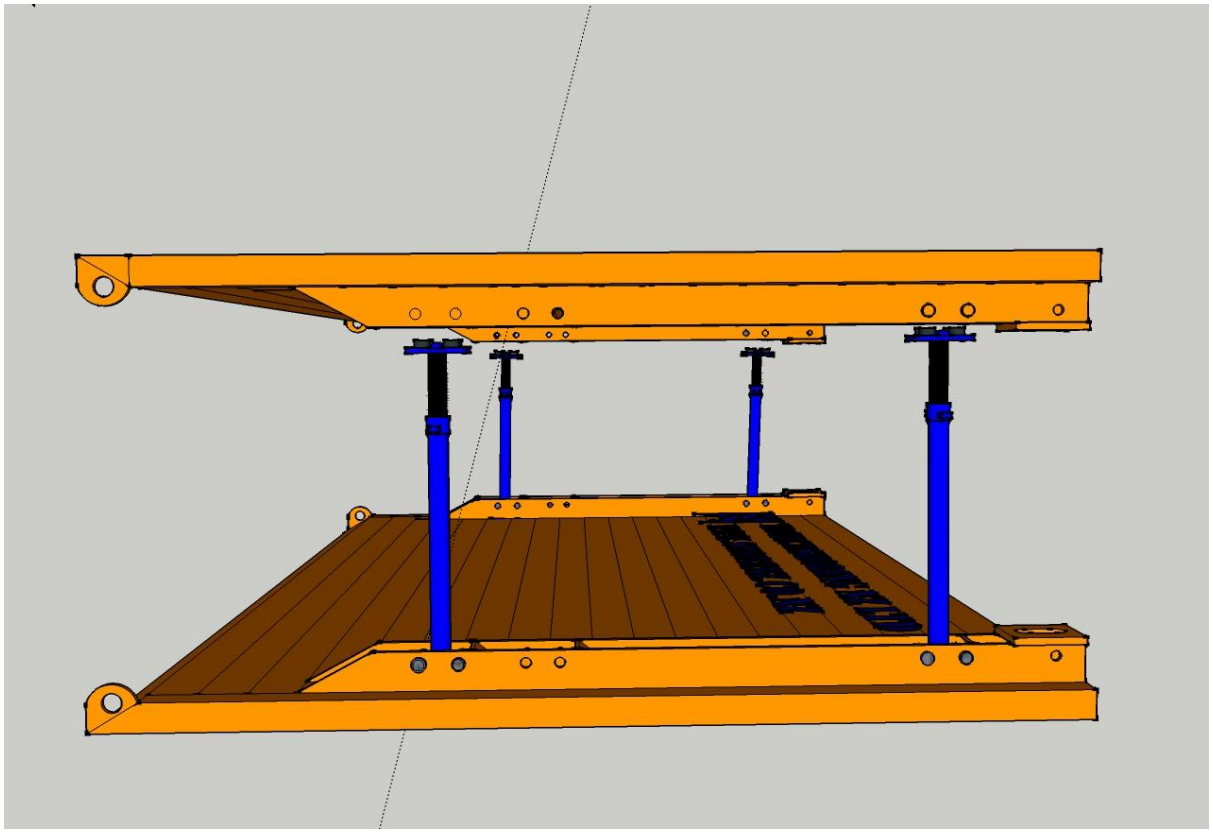

Step 5,

Put 20mm pins into the two holes either side of the strut and secure with clip provided. Wind the struts to the measurement required for the job, the bottom strut should be roughly 30mm wider than the top.

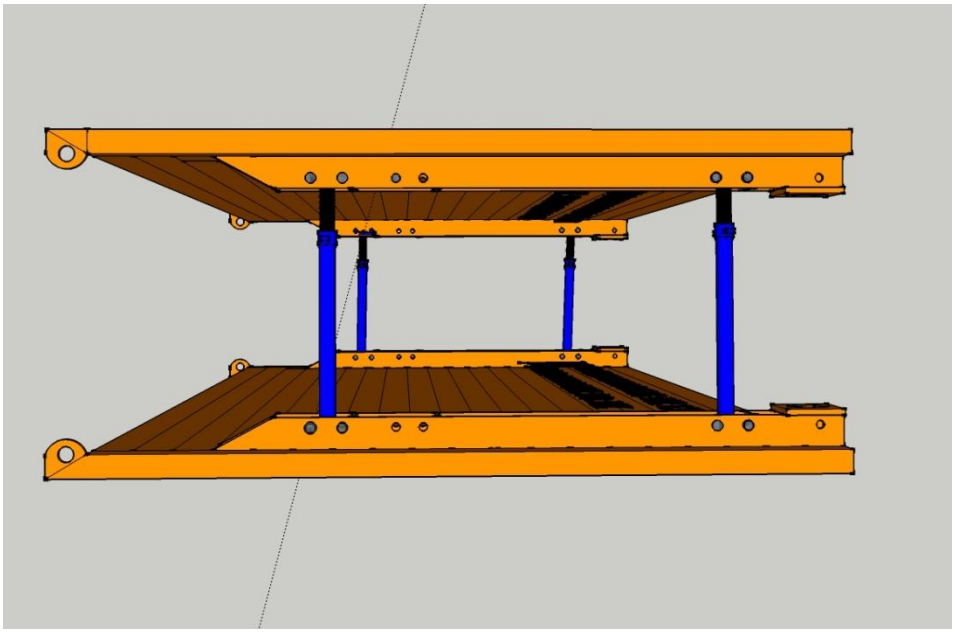

Step 6,
Using certified chains, attached to the lifting points never by the struts. Roll the unit onto its bottom edges ready for install. Whenever lifting or moving always use the lifting points. Never lift off the struts they will bend and need to be replaced

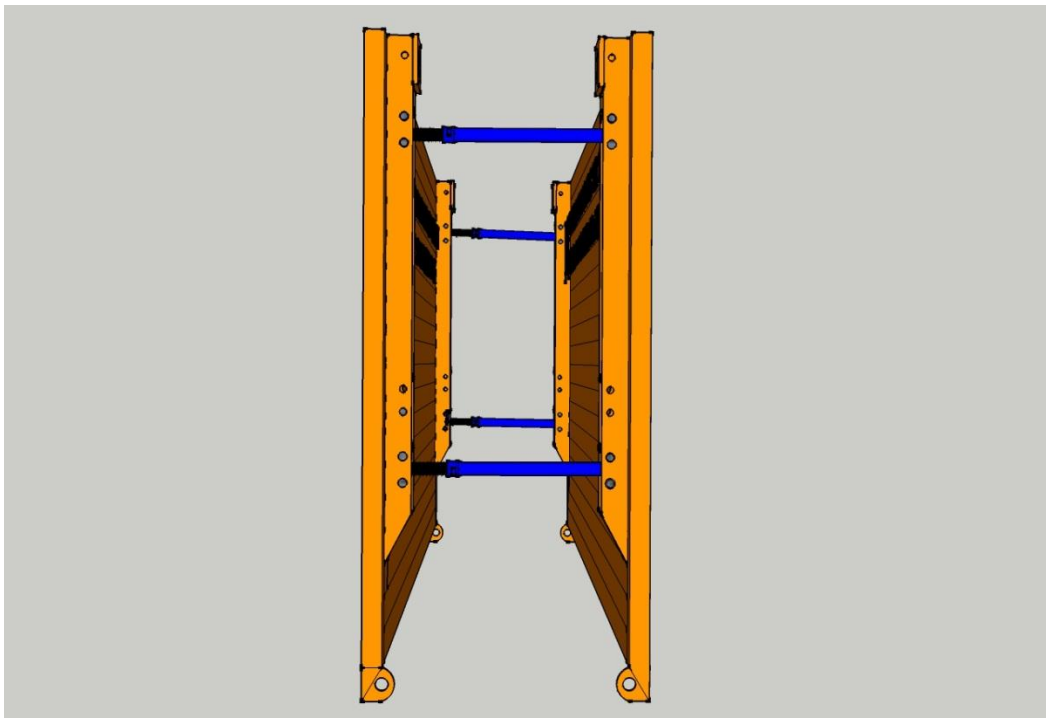

The Install method is a dig and drop shield, do not try to push these in

KVL manhole base unit

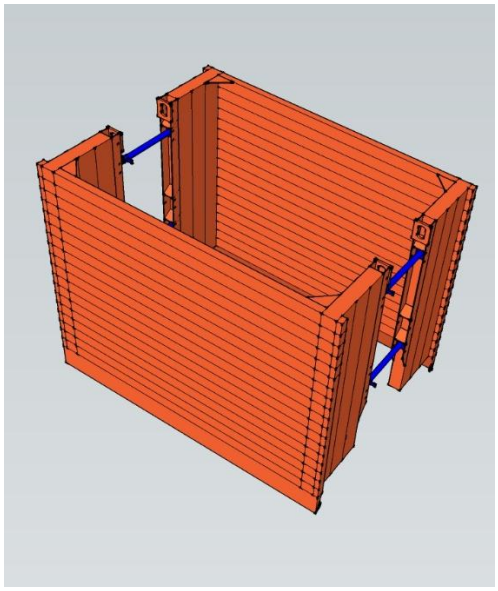

KVL Mini pile frame

