

New Zealand's Excavation Shoring Specialists

Hirepool SHORING

www.shorenz.co.nz



Company overview

Hirepool Shoring (HPS)

TSNZ was formed in 2007 for the purposes of supplying proprietary shoring equipment for hire and for sale throughout New Zealand and the South Pacific. TSNZ was fully acquired by Hirepool in 2020 and now operates as a specialist division of Hirepool.

HPS are excavation safety specialists offering a wide range of shoring systems and solutions for all types of excavations. This includes shoring for trenches and open pit excavations. HPS also offer specific design services for more complex projects or those requiring site specific certification.

HPS source proprietary mechanical shoring systems from the leading German shoring designer and manufacturer LTW. This includes steel trench and manhole boxes as well as a range of slide rail systems. Light-weight aluminium trench boxes and proprietary hydraulic shoring equipment are supplied to HPS by MGF in the UK. All equipment is certified to the world leading European standard EN 13331.

The experience HPS has gained since 2007, and it's sole focus on excavation shoring, has positioned Hirepool as New Zealand's market leader in the field.



Locations

Hirepool Shoring's head office is located at 1 Sylvia Park Rd, Auckland and a primary yard at 94 Hunua Rd, Papakura. In Christchurch we have an office and yard at Nathan Place, opposite Hirepool on the corner of John's Rd & Sawyers Arms Rd. (See page 28 for more information)

Equipment Sales

Hirepool Shoring is the NZ distributor for LTW, Germany and MGF, UK. Limited stocks of new equipment are held in NZ, otherwise material is made to order and imported, with lead times, typically 3-4 months.

Used equipment may be available from time-to-time ex stock Auckland or Christchurch.

Design and Support Services

HPS provides support to customers for:

1. Shoring design and advice for general and specific applications, including site specific temporary works designs.
2. Training in the safe and efficient use of the systems
3. Site support from HPS personnel

Visit www.shorenz.co.nz for information about shoring regulations, systems supplied by HPS and other valuable information.



Contents

Trench Box Systems 6

Ultralite Aluminium Trench Boxes 7

KVL Mini Box 8

KVL Manhole Box 9

KS100 Trench Box 10

KS Manhole Box 11

Drag Box 12

Multibox 13

KKP Sheet Pile Frames – Mini & Standard 14

Slide Rail Systems 15

Single Slide Rail 16

Double Slide Rail 17

Corner Slide Rail – Single & Double 18

Combination Pit Shoring 19



Hydraulic Systems 20

203 Series Hydraulic Brace 21

200 Series Hydraulic Strut 22

Trench Sheets 23

Gripshore Soldiers 24

Gripshore Trench Box 25

Ancilliaries 26

Gripshore GRP Ladders 27

Locations 28



Trench Box Systems

HPS offer an extensive range of Box Systems to suit a wide variety of industry applications.

Ranging from our Ultralite aluminum boxes and Mini KVL light steel boxes, designed for use when excavator size or access is limited, through to larger steel KS100 boxes for larger and deeper excavations.

All HPS boxes have been designed and continuously developed over many years to deliver maximum production, combined with optimum safety.

These key features are made possible by incorporating user friendly yet durable components, with all of our box systems featuring telescopic strut assemblies which can be quickly assembled and adjusted to meet required dimensions.



Ultralite Aluminium Trench Boxes

This simple to assemble light, robust two-sided mechanical support system is built for the installation technique, where ground movement is not critical. Generally suitable for trench depths of up to 2.5m.



Description	Unit L X H (mm)	Clear Inside Width Wi (mm)	Panel Thickness T (mm)	Clearance Beneath Struts (mm)	Clearance Between Struts (mm)	Approx. Weight (kg)	Limit State Design Load (kN/m^2)*
Ultralite Base	2000 x 1450	735 - 1635	60	825	1790	310	30
Ultralite Top	2000 x 970	735 - 1635	60	–	1790	216	30
Ultralite Base	3000 x 1450	735 - 1635	60	825	2790	402	25
Ultralite Top	3000 x 970	735 - 1635	60	–	2790	272	25

KVL Mini Box





The lightweight KVL Mini Box is ideal for urban areas with a 3000mm depth achievable.

Inside width varies dependent upon the strut type:

Type A: 530mm – 630mm

Type B: 620mm – 810mm

Type C: 800mm – 1170mm

Type D: 1160mm – 1890mm

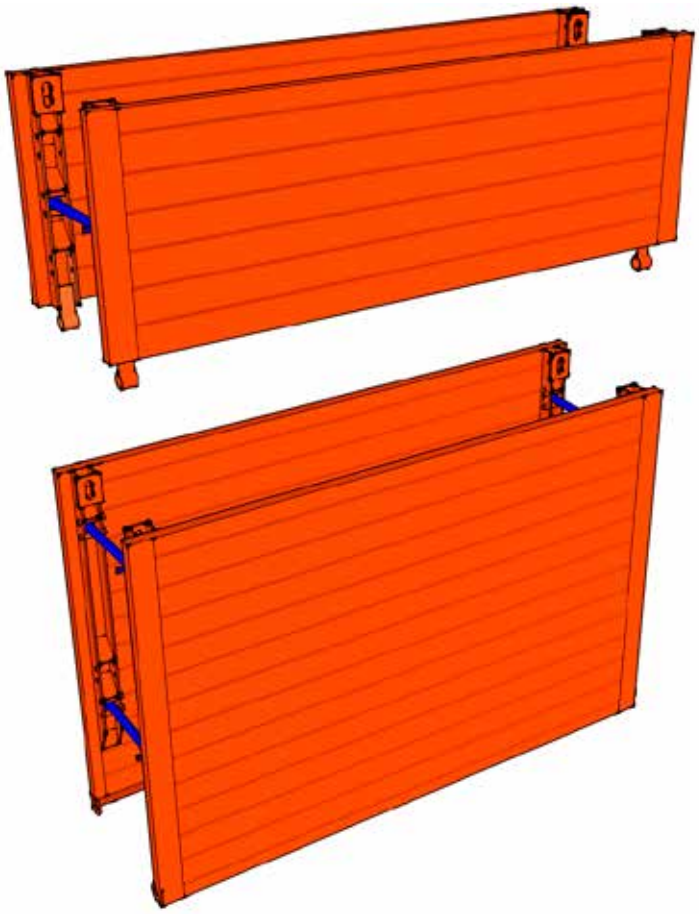

Description	Unit L X H (mm)	Clear Inside Width (mm)	Thickness (mm)	Clearance Beneath Struts (mm)	Clearance Between Struts (mm)	Weight (kg)	Limit State Design Load (kN/m^2)*
KVL Base	2000 x 2000	530 – 1890	60	980	1690	587	40.8
KVL Top	2000 x 1000	530 – 1890	60	–	1690	393	40.8
KVL Base	3000 x 2000	530 – 1890	60	980	2690	805	27.2
KVL Top	3000 x 1000	530 – 1890	60	–	2690	435	27.2

* max. load that can be applied to the trench box. Figures include a partial factor of safety Y_M of 1.1 for resistance (tolerances in material/steel). As stated in EN13331 and AS 4744.1

KVL Manhole Box





The lightweight KVL Manhole Box is ideal for manhole installations up to 3000mm deep.

Inside widths are 2000mm x (strut width):

Type A: 1530mm – 1630mm

Type B: 1620mm – 1810mm

Type C: 1800mm – 2170mm

Type D: 2160mm – 2890mm

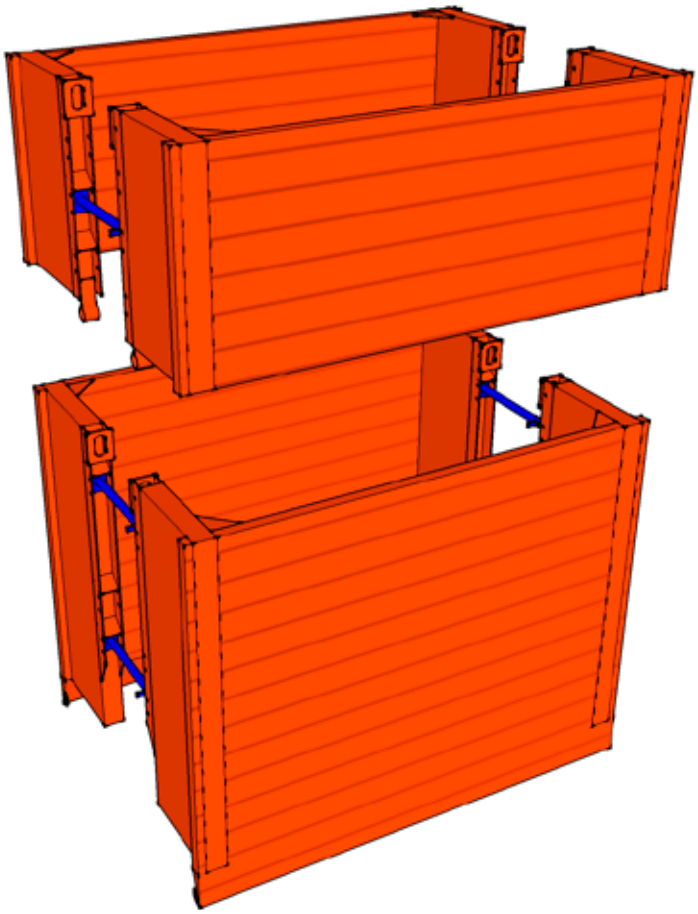

Description	Unit L X H (mm)	Clear Inside Width (mm)	Thickness (mm)	Clearance Beneath Struts (mm)	Clearance Between Struts (mm)	Weight (kg)	Limit State Design Load (kN/m^2)*
2m KVL MH Base	2500 x 2000	2000 – 2890	60	980	2080	1080	53.3
2m KVL MH Top	2500 x 1000	2000 – 2890	60	–	2080	600	53.3

* max. load that can be applied to the manhole box. Figures include a partial factor of safety Y_M of 1.1 for resistance (tolerances in material/steel). As stated in EN13331 and AS 4744.1

KS100 Trench Box





The larger KS100 Box is designed to meet the majority of trench support requirements.

Suitable for trenches up to 3500mm deep and in some situations to 4800mm.

Inside width 600mm – 3300mm

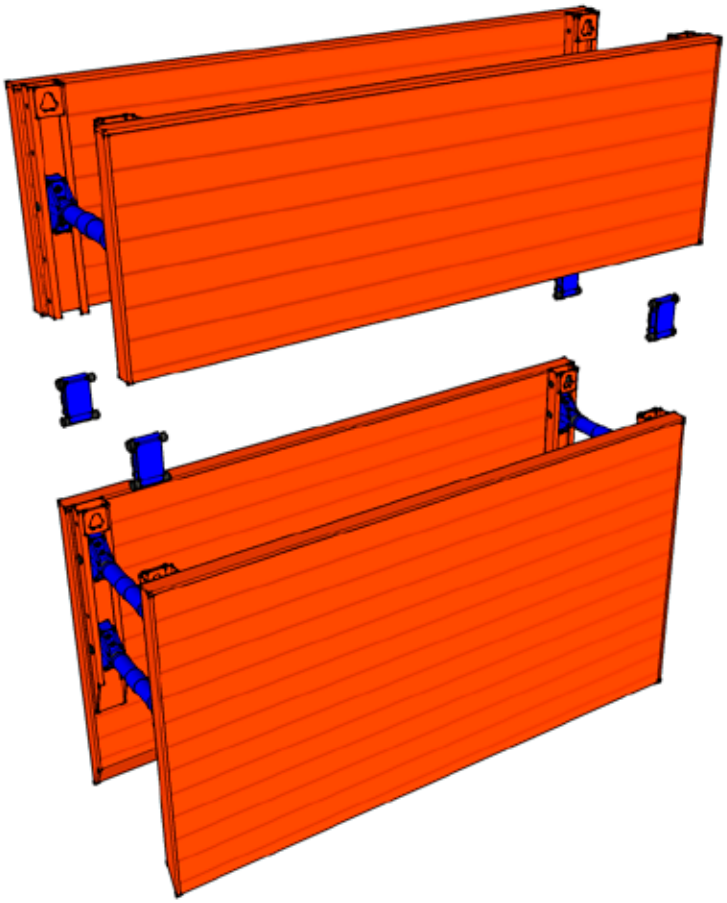

Description	Unit L X H (mm)	Clear Inside Width (mm)	Thickness (mm)	Clearance Beneath Struts (mm)	Clearance Between Struts (mm)	Weight (kg)	Limit State Design Load (kN/m^2)*
2.5m KS100 Base	2500 x 2200	1000 – 3300	100	1400	2114	1662 – 1913	78
2.5m KS100 Top	2500 x 1300	1000 – 3300	100	–	2114	1044 – 1170	78
3.5 KS100 Base	3500 x 2400	1000 - 3300	100	1600	3110	2020 - 2250	55.7
3.5m KS100 Top	3500 x 1350	1000 - 3300	100	-	3110	1210 - 1335	55.7
4.0m KS100 Base	4000 x 2200 4000 x 2400	1000 – 3300	100	1400 1600	3614	2418 – 2669	44.6
4.0m KS100 Top	4000 x 1300	1000 – 3300	100	–	3614	1284 – 1410	44.6

* max. load that can be applied to the trench box. Figures include a partial factor of safety Y_M of 1.1 for resistance (tolerances in material/steel). As stated in EN13331 and AS 4744.1

KS Manhole Box



The KS Manhole Box provides quick construction and can be used for a majority of manhole installation requirements.

Suitable for depths up to 5.2m.

Inside widths are 2m - 3.3m.



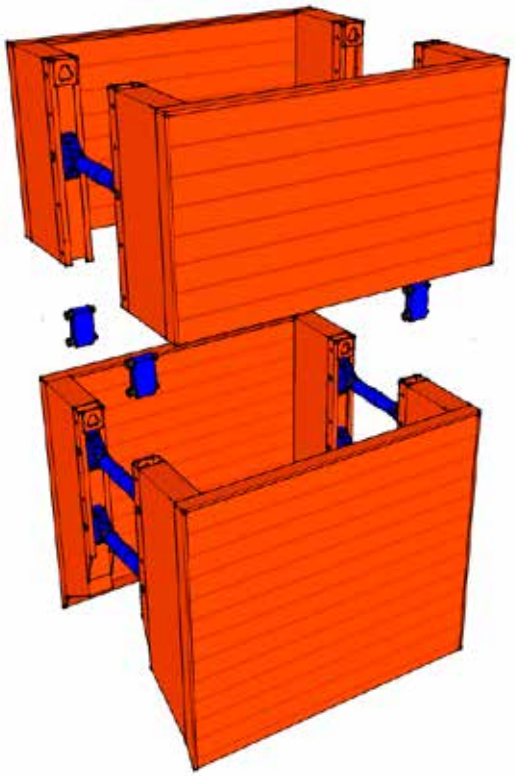

Description	Unit L X H (mm)	Clear Inside Width (mm)	Thickness (mm)	Clearance Beneath Struts (mm)	Clearance Between Struts (mm)	Weight (kg)	Limit State Design Load (kN/m²)*
KS Manhole Base	2500 x 2400	2000 – 3300	100	1540	2080	1934	78
KS Manhole Top	2500 x 1400	2000 – 3300	100	–	2080	1339	78

* max. load that can be applied to the manhole box. Figures include a partial factor of safety Y_M of 1.1 for resistance (tolerances in material/steel). As stated in EN13331 and AS 4744.1

Drag Box

This simple to assemble, two-sided, mechanical shield system is designed to be installed by an excavator, using the dig and drag technique.



Length Height (mm))	Internal Width (mm)	Panel Thickness (mm)	Box Weight (kg)	Length Between Struts (mm))	Clearance Below Rear Strut (mm)
5100 x 2424	1020 - 1320	100	3186	4200	1400

MultiBox



Multibox is the ideal solution for situations where pipes/ services are entering the excavation, yet a four sided support is required.

Inside width varies dependent upon the panel length opted for with 1500mm, 2000mm, 2500mm & 3000mm panel lengths.





Panel Size (mm)	Panel Weight (kg)	Limit State Design Load (kN/m^2)*
1500 x 600 x 60	70	82.7
2000 x 600 x 60	85	69.3
2500 x 600 x 60	100	43.2
3000 x 600 x 60	120	29.5

* max. load that can be applied to the panels. Figures include a partial factor of safety Y_M of 1.1 for resistance (tolerances in material/steel). As stated in EN13331 and AS 4744.1

Post Size (mm)	Post Weight (kg)	Limit State Design Load (kN/m^2)*
1800	61	48.4
2400	78	48.4
3000	92	48.4

KKP Sheet Pile Frames – Mini & Standard

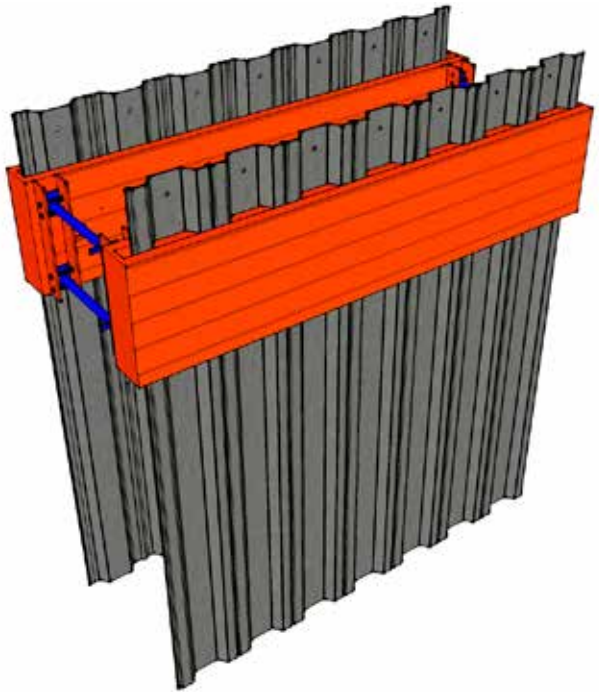

This is Ideal for areas where services crossing the trench, like power, water, gas, telecom and etc create problems.

KKP Mini

This frame is to be used in conjunction with the KVL Mini Boxes as it uses the same strut.

This is suitable for trenches up to 4000mm deep. Inside width is as per KVL Mini Box.

These units are 2840mm long with a panel depth of 600mm.

KKP Standard

This larger frame is dual fitted for use with VB100 struts and slide rail systems.

This is suitable for trenches up to 3500mm deep and inside width of 600mm to 3300mm when used with the KS100.

6000mm deep and inside width to 7400mm should be used as part of the slide rail system.

Units are 4000mm long with a panel depth of 1000mm.





Description	Unit L X H (mm)	Clear Inside Width (mm)	Thickness (mm)	Clearance Between Struts (mm)	Weight (kg)	Limit State Design Load (kN/m^2)*
Mini Pile Guide KKP	2840 x 600	530 – 1890	60	2540	730	44.2
Pile Guide KKP	4020 x 1000	1000 – 3300	120	3590	2170	81.6

* max. load that can be applied to the guide panels. Figures include a partial factor of safety Y_M of 1.1 for resistance (tolerances in material/steel). As stated in EN13331 and AS 4744.1

Slide Rail Systems

HPS offer a range of Slide Rail Shoring Systems to suit a wide variety of industry applications.

Ranging from our Single Slide Rail system for installation of large diameter pipe or box culverts, to our Double Slide Rail for very deep applications and combination systems for installation of larger structures requiring clear spans.

Slide Rail systems are designed and built to deliver maximum production, combined with total safety.

This system is Ideal in poor soil conditions, this “dig and push” system allows low vibration installations, provides soil support for the excavations, adjacent structures and existing services or utilities, and minimizes trench width. This system is installed from the top down and removed from the bottom up. Minimises restoration time and cost.



Single Slide Rail



This is designed for when trench boxes are not suitable. For large diameter pipe or poor ground conditions.

It is suitable for trenches up to 4m deep.

These panels are available in 2m, 3m, 4m, 5m and 6m lengths.

Transverse frames are able to be moved up and down within the slide rail tracks to achieve desired clearances, up to 2m.

As well as Inside with up to maximum 5.8m.

These recommended installations should be used with hydraulic excavators from 15 tonnes for ease of installation.



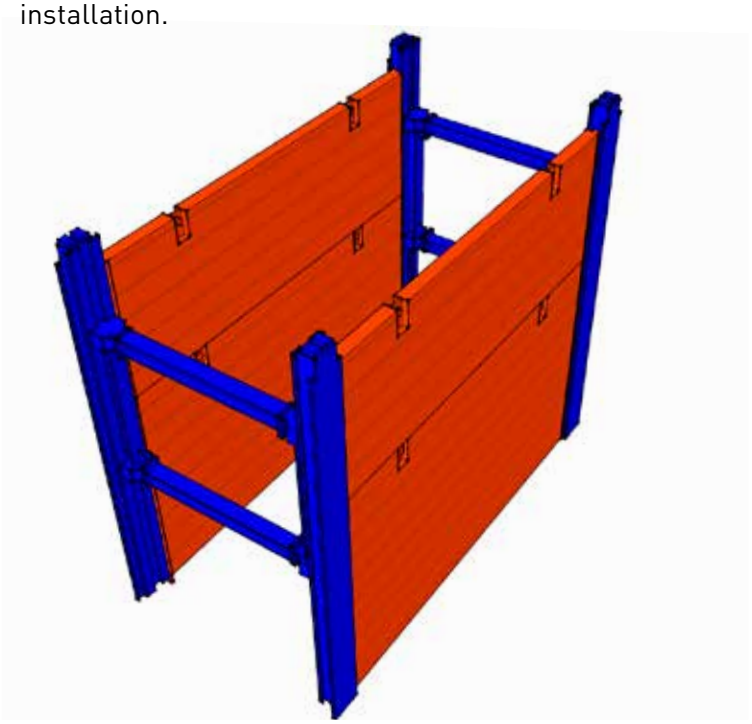

Panel Size	Weight (kg)	Thickness (mm)	Limit State Design Load (kN/m²)*
2000 x 2400	509	100	171.6
3000 x 2400	692	100	81.1
4000 x 2400	1165	120	71.0
5000 x 2400	1635	120	72.1
6000 x 2400	2235	120	59.1
2000 x 1400	336	100	171.6
3000 x 1400	452	100	81.1
4000 x 1400	744	120	71.0
5000 x 1400	1020	120	72.1
6000 x 1400	1395	120	59.1

Double Slide Rail



This system is for larger and deeper excavations, usually large deep pipesor culverts.

It is suitable for trenches up to 6m deep.

These panels are available in 2m, 3m, 4m, 5m and 6m lengths.

Transverse frames are able to moved up or down within the slide rail tracks to achieve the desired clearance, up to 2.6m.

As well as Inside width up to a maximum of 7.4m (or greater with additional bracing)

These recommended installations should be used with hydraulic excavators from 25 tonnes to 45 tonnes for ease of installation.



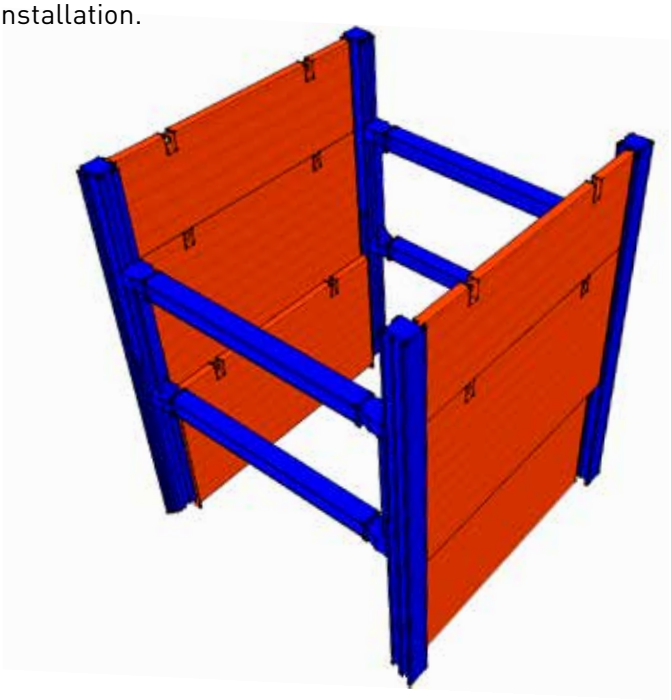

Panel Size	Weight (kg)	Thickness (mm)	Limit State Design Load (kN/m²)*
2000 x 2400	509	100	171.6
3000 x 2400	692	100	81.1
4000 x 2400	1165	120	71.0
5000 x 2400	1635	120	72.1
6000 x 2400	2235	120	59.1
2000 x 1400	336	100	171.6
3000 x 1400	452	100	81.1
4000 x 1400	744	120	71.0
5000 x 1400	1020	120	72.1
6000 x 1400	1395	120	59.1

Corner Slide Rail – Single & Double



This system is used where there is a requirement to shore four sides of excavation.

Single corner rail is suitable for excavations up to 4m deep

Double corner slide rail is suitable for excavations up to 7.5m deep.

These panels are available in 2m, 3m, 4m, 5m and 6m lengths.

For single corner slide rail the recommended hydraulic excavator size ranges from 15 tonnes to 25 tonnes for ease of installation.

For double corner slide rail the recommended hydraulic excavator size ranges from 25 tonnes to 45 tonnes for ease of installation.



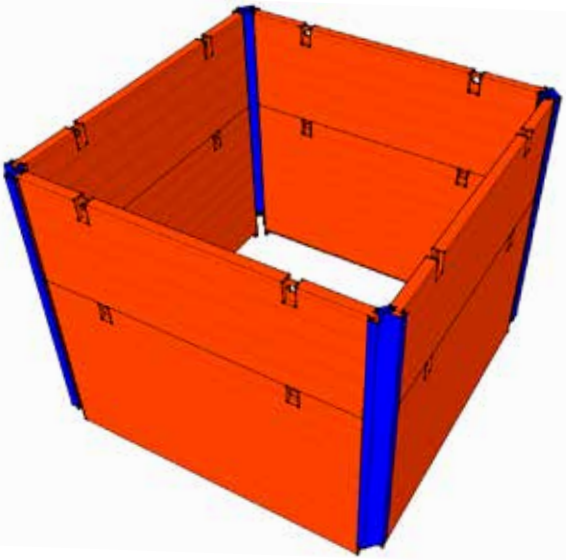

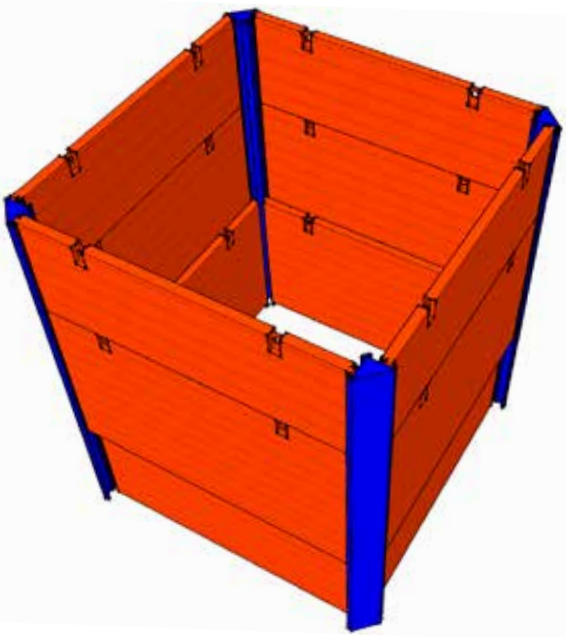

Combination Pit Shoring





Combinations of corner slide rail and parallel slide rail are used in situations where an excavation with a large clear opening is needed, but still requires shoring on four sides.

Depths are achievable slightly less with standard parallel and corner slide rail systems, due to the need for attaching external walers to the posts.

Once walers are in place and secured, the transverse beam assemblies can be removed to provide a clear opening. Most cases also requrie a sacrificial beam to be placed at the base of the excavation to retain the base of each parallel post once the frames are removed.

Combinations of all of the panel unique wedding quo lengths can be used to achieve a range of lengths and depths.

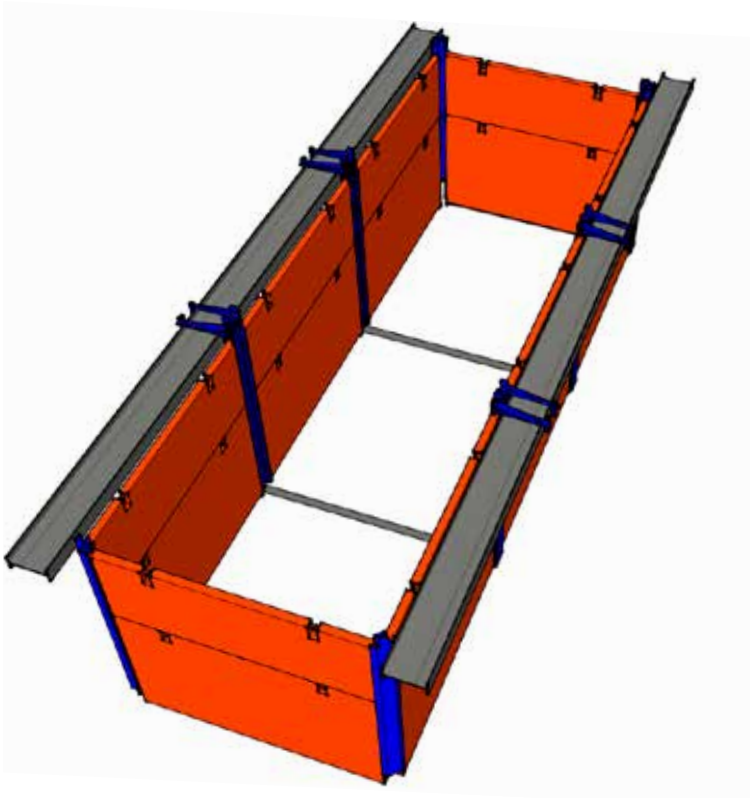

Hydraulic Systems

Hydraulic bracing systems are designed to operate in conjunction with trench sheets or sheet piles.

These systems satisfy the many permutations for two sided trench and four sided manhole, chamber or small cofferdam type excavations that are typically encountered in groundwork, utility and other general industry applications.

Simple pin and clip connections enable rapid assembly, installation and precise adjustment of dimensions can be achieved via integral hydraulic rams.

Site safety is assured by utilising our range of compatible safety products and ancillary tools.

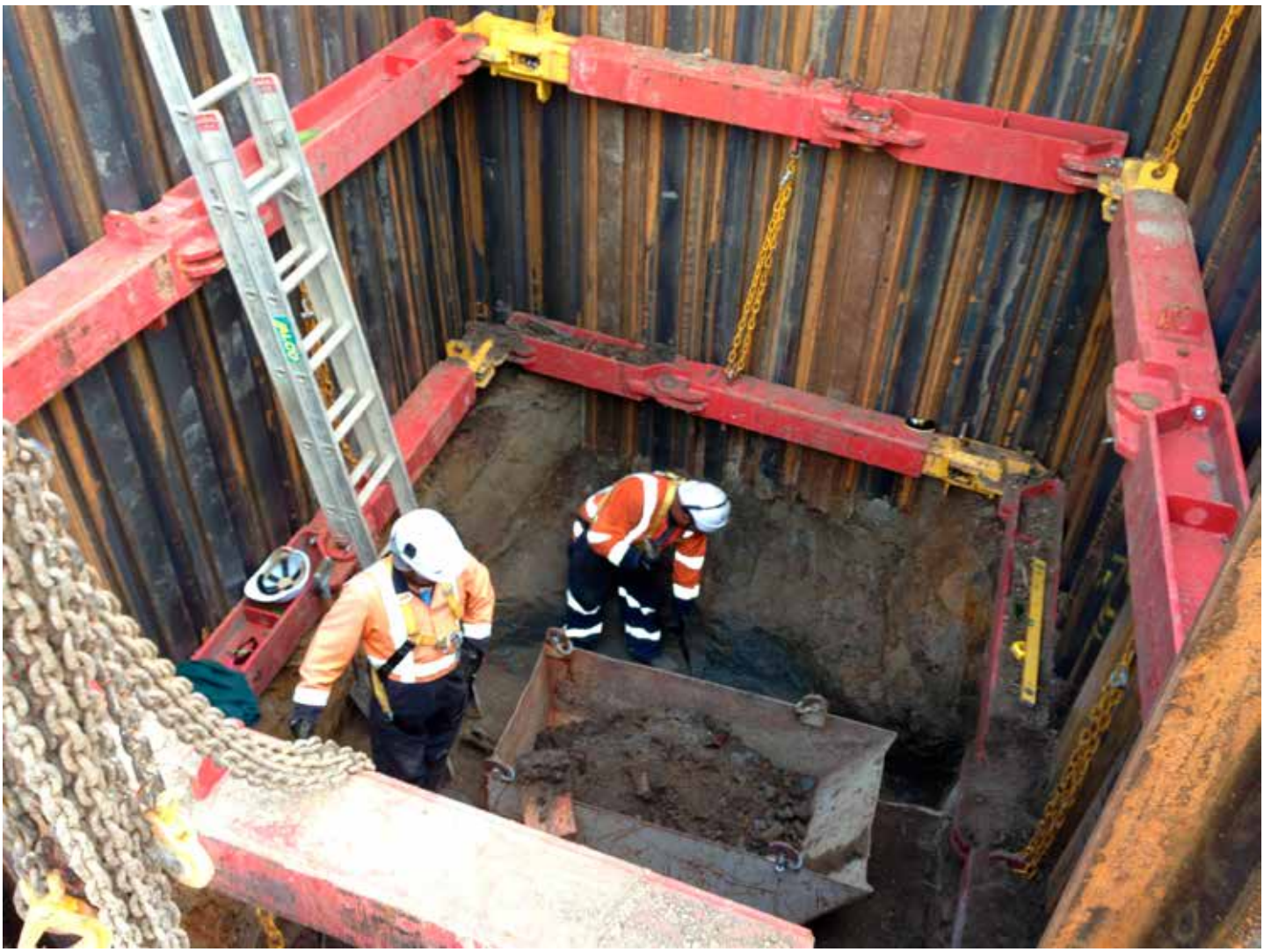

203 Series Hydraulic Brace

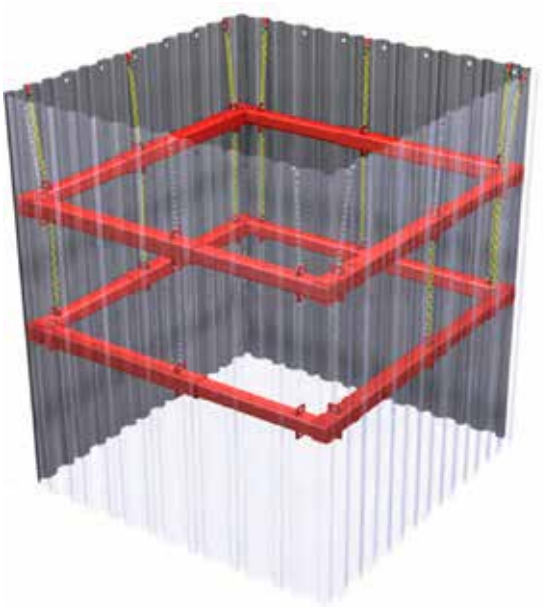

Modular hydraulic braces that can be configured for multi-sided excavations with trench sheets or sheet piles.

Modular systems with a range of extension sections to provide clear frame dimensions from 2m to 12m.

Spans are able to be increased with the addition of cross struts and/or knee braces.

Simple pinned connections can be used for speed, ease of assembly, installation and extraction.

Double acting hydraulics, can be pumped in and out making installation, extraction easy and safe.

Temporary works designs are recommended for some applications and are available on request to meet specific site conditions.





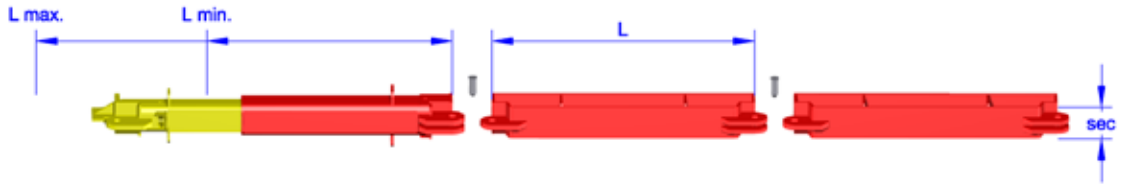

Description	Length L (mm)	Section (mm)	Weight	Safe Working Load
Hydraulic Pack (15t)	1920 – 2920	200 SHS	352kg	150kN
203 Series Extension	500 – 3000	203 UC	100kg/m	238kNm

200 Series Hydraulic Strut



This Strut should be used with the 203 series bracing to provide effective cross struts and knee braces.

Also for effective propping systems to support piled or other retaining wall types.

Modular system with a range of dedicated extension sections.

These are compatible with the 203 brace frames to provide heavy duty support for deep parallel shoring or large in ground tanks.

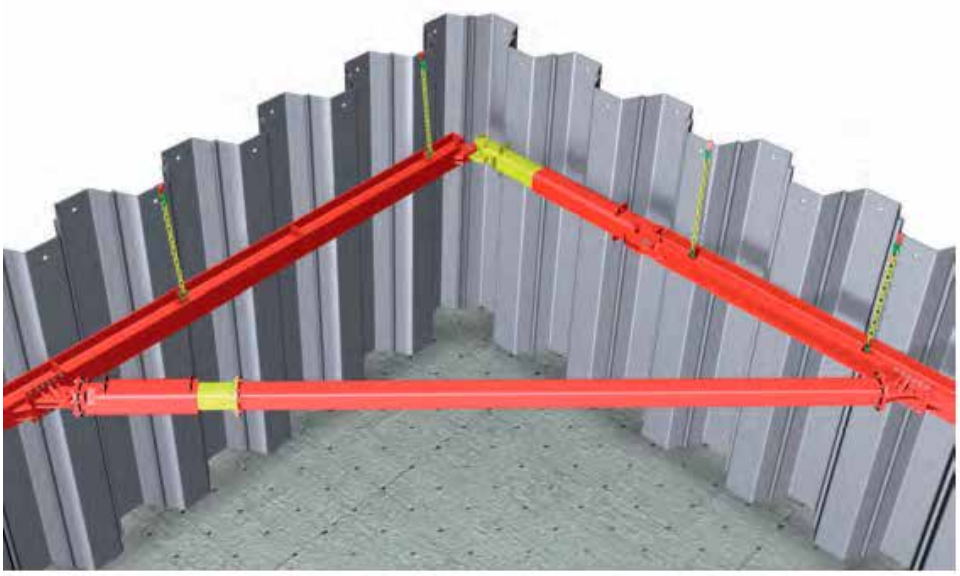

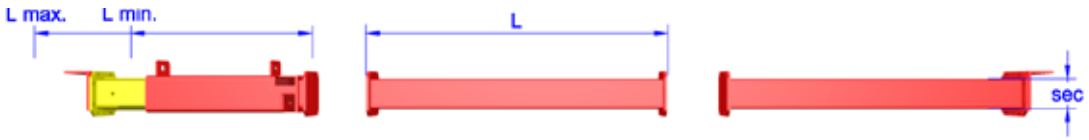

Description	Length L (mm)	Section (mm)	Weight	Safe Working Load (kN)
Hydraulic Pack (54t)	1150 – 1750	250 SHS	275kg	540
200 Series Extension	500 – 3000	200 SHS	70kg/m	540

Trench Sheets



Steel Trench Sheets provide efficient and flexible ground support solutions for general trenches, manholes, tank excavations and other applications encountered in typical groundworks and utility projects.

These have profiles, widths, lengths and thicknesses to suit KKP Mini Pile frame, KKP Standard Pile frame, MGF Walers and MGF 203 Series Brace System.

Lengths are available from 2.5m to 6m.





STD



KD 4/6



KD 6/6 – 6/8

Description	Width (mm)	Profile Depth (mm)	Steel Thickness (mm)	Weight (kg/m)	Section Modulus (cm^3/m)	Moment Capacity (kNm/m)
STD	330	35	3.5	11.3	45.7	7.3
KD 4/6	400	50	6	22.1	102	25.5
KD 6/6	600	78	6	37.5	184	33.7
KD 6/8	600	80	8	50	242	60.5

Gripshore Soldiers

These two sided lightweight hydraulic bracing systems are quick and easy to assemble; Gripshore can be installed and extracted by hand.

They are designed for use as a temporary support for small trenches.

They should be used inside widths between 550 – 1375mm.

Also are suitable for depths up to 2.0m.





Description	Weight (kg)	Inside Width Between Rails (mm)	Clearance Under Lowest Jack (mm)	Clearance Between Jacks (mm)	Working Load Moment Capacity (kN/m)
1600mm GRP Rail CW Backing Board	12.5	550 – 1375	570	600	40.8
2100mm GRP Rail CW Backing Board	16.1	550 – 1375	570	1100	27.2

Description	Weight (kg)	Range (mm)	Axial Safe Working Load (kN/m)
Type A Jack	5.7	550 – 900	60
Type B Jack	8	850 – 1375	60

Gripshore Modular Box

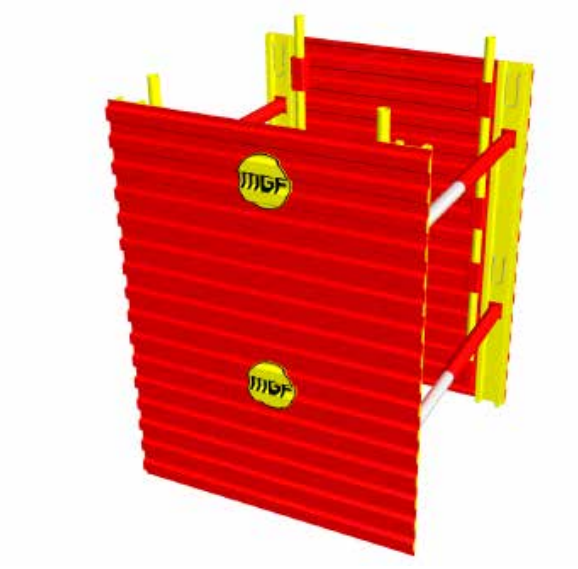

These two sided lightweight hydraulic bracing systems are quick and easy to assemble; Gripshore can be installed and extracted by hand.

They are designed for use as a temporary support for small trenches.

They should be used inside widths between 550 – 1375mm.
Also are suitable for depths up to 2.0m.





Description	Weight (kg)	Inside Width Between Rails (mm)	Clearance Under Lowest Jack (mm)	Working Load Moment Capacity (kN/m)
1500mm x 1000mm Panel	19	550 – 2000	570	16.5

Description	Weight (kg)	Range (mm)	Axial Safe Working Load (kN/m)
Type A Jack	5.7	550 – 900	60
Type B Jack	8	850 – 1375	30

Ancillaries

Edge Safe

They are a lightweight and easy to install system. They are able to be used with a range of trench boxes

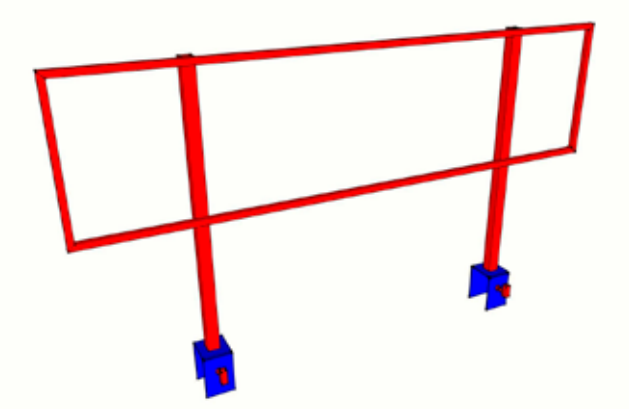

Ladder Access

Platform & Ramp

They are a robust and safe access platform that can be used with various shoring types. Self closing gate.

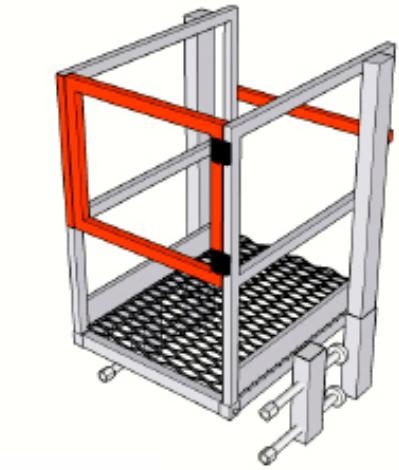



Road Plates

The comprehensive range plates are available from 2.4m to 5m long and 1.2m to 2.4m wide.

Gripshore GRP Ladders



Incredibly Lightweight

These are Incredibly lightweight one piece leaning rung ladders, manufactured from E17 Structural Grade Pultruded GRP. They are available in 3m and 5m lengths. 150kg SWL.

They are electrically, non-conductive and fire resistant to ASTM E84 Class 1.

These ladders are 400mm wide square, anti-slip rungs and rubber anti-slip end caps.

They weight 11kg for the 3m and 18kg for the 5m.



Hirepool Shoring Locations

North Island

Head Office / North Island Office & Stock
94 Hunua Road
Papakura
Auckland, 2110



South Island

South Island Office & Stock
Nathan Place
Harewood
Christchurch, 8051



Key Contacts

General Manager
Frank Swanberg
Mob: 021 944 632
Email: frank.swanberg@shorenz.co.nz

Operations Manager
Jarrad Christie
Mob: 021 289 9015
Email: jarrad.christie@shorenz.co.nz

Sales Specialist Upper North
Kirby Maxwell
Mob: 027 5143 909
Email: kirby.maxwell@shorenz.co.nz

South Island Sales & Operations
Trent Lemmens
Mob: 027 238 3274
Email: trent.lemmens@shorenz.co.nz

Sales Specialist Lower North
Joshua Brain
Mob: 027 519 8304
Email: joshua.brain@shorenz.co.nz