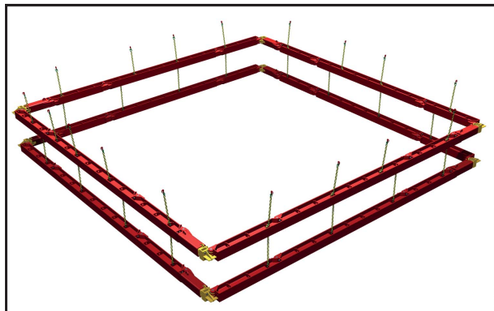

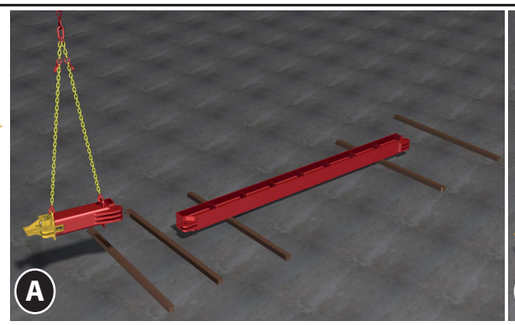

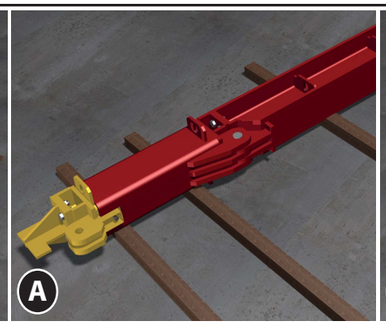

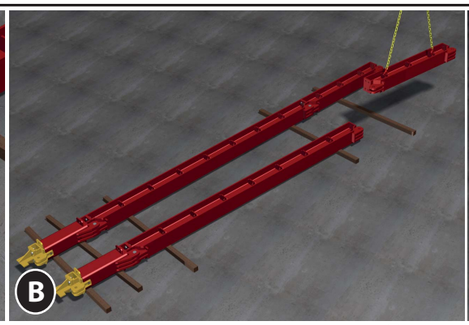

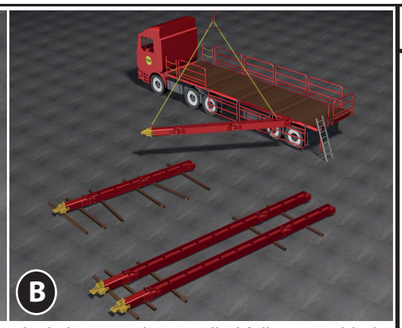

ASSEMBLY

A Assemble individual Tank Brace frame legs as shown, ensuring that any intermediate joints have their pin and retaining clip / bolt and nut assemblies fully fitted/tightened. The double acting hydraulic ram assemblies should be pumped in sufficiently to allow for ease of installation (min. sheet dim - 150mm)

B Alternatively legs can be supplied fully assembled and pumped out to the correct lengths

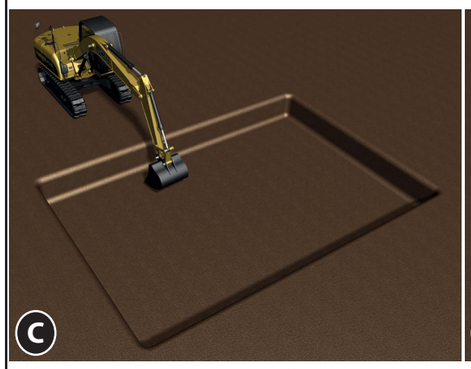

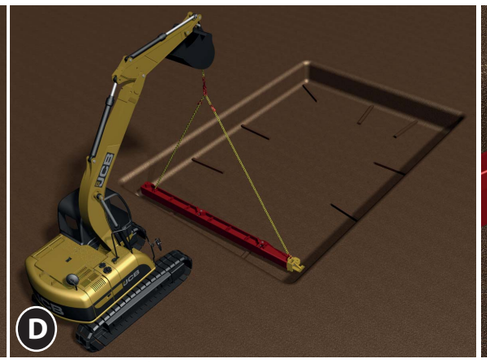

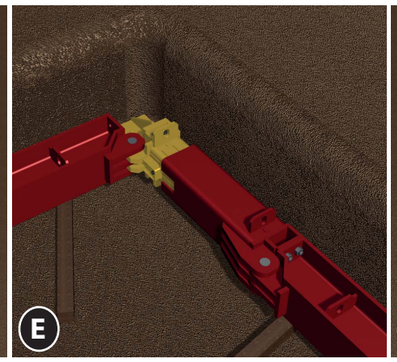

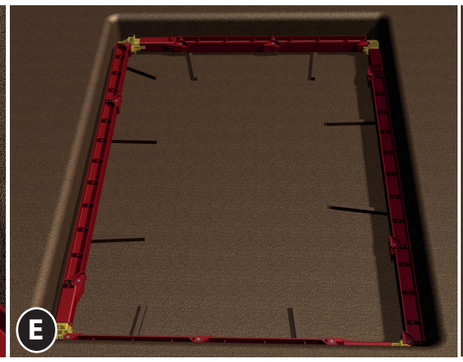

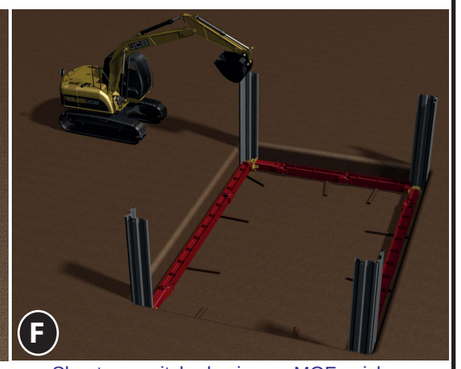

C Excavate to max 1.0m below ground level (if site conditions permit)

D Ensure that timber skids are placed within the excavation, and are level. Lower the first leg onto the skids

E Lower the second leg and connect the corners together using the corner pin and R-clip. Continue to do this for each leg until the first frame assembly is complete, ensuring that there is sufficient tolerance to swing the last corner into position and pumping out the hydraulic ram assemblies as required

F Commence by installing eight corner sheets as shown. Sheets are pitched using an MGF quick release shackle and pushed gently into the trench using the excavator bucket. Sufficient toe (min. 300mm) must be provided to ensure sheets cannot slip or slide. Once corner sheets are pitched then each powerpack can be pumped out to pre-load/restrain the sheets fully. Manual assistance will be required to pitch and release sheets and ensure they are installed plumb/square (no person at any time should stand directly under bucket/sheet or over the edge of the excavation)

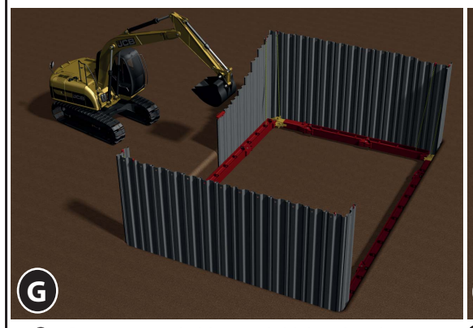

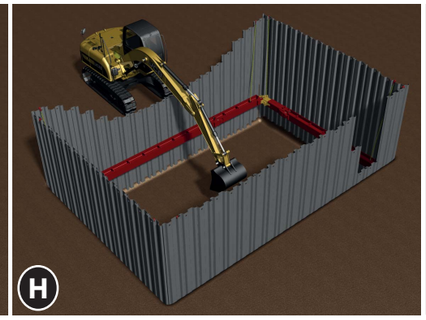

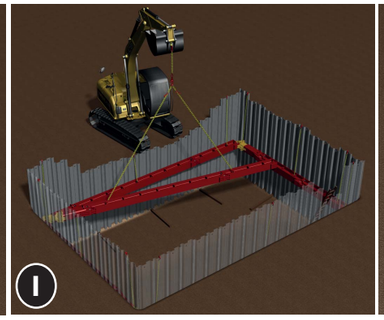

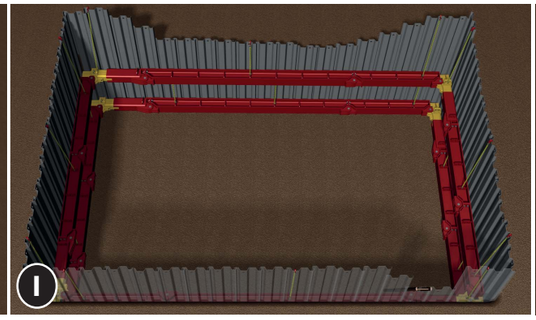

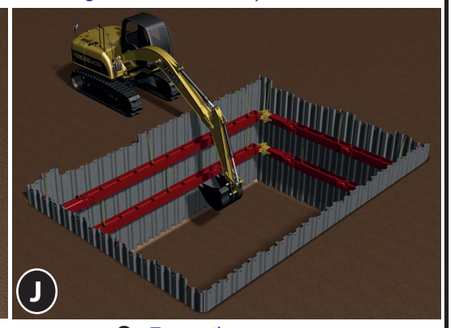

G Commence pitching and driving the sheets as far as is practicable (using the frame as a guide) without buckling the sheets. Use an MGF driving cap to protect the sheet ends from damage

H Once all the required restraining chains are attached it is possible to excavate beneath the lower frame to the required level of the next frame. The sheets must be driven ahead of the dig level as work proceeds (maintaining the minimum toe required by the site specific design). Alternatively the sheets may be pre-driven to their final toe-level

I Once the excavation has reached the correct depth the next frame can start to be assembled. Each leg is lowered onto timber skids/packers and positioned as tight as possible up against the sheets, again ensuring that there is sufficient tolerance to swing the last corner into position. Once all corners are connected the individual powerpacks can be pressurised against the sheets and the restraining chains attached. Always ensure a safe, secure means of access is provided prior to entry.

J Excavation can now proceed to final level.

INSTALLATION

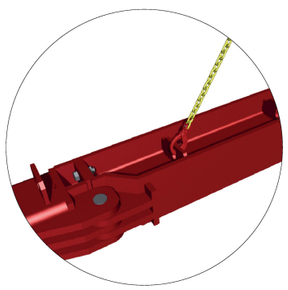

Handling Point Detail

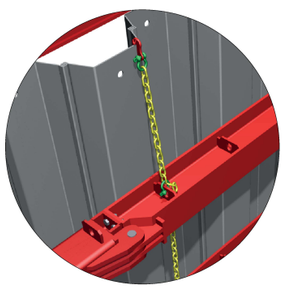

Restraining Chain Connection Detail

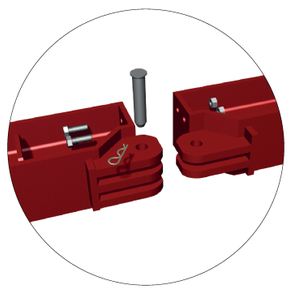

Leg Connection Detail

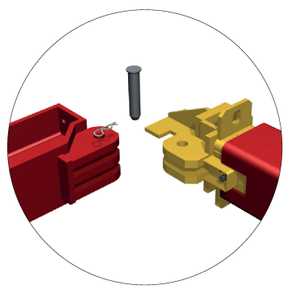

Corner Connection Detail

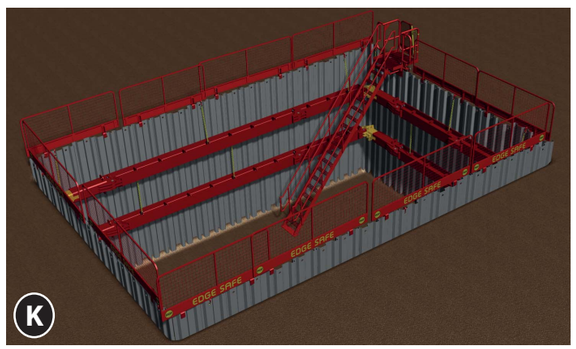

K Install edge protection and a safe means of access

L **Maintenance**

Prior to permitting entry always ensure:-

- Tank Brace legs are installed plumb, square and level to each other
- All components are fitted and show no signs of damage, distress or fluid/pressure loss
- Safe means of access/egress is provided from within the excavation

M **Removal**

Removal is a reverse of installation ensuring material is backfilled and compacted as extraction proceeds

UNCONTROLLED WHEN PRINTED
go to www.mgf.ltd.uk for latest version

GENERAL

Current health and safety legislation requires that construction equipment users formulate a site specific Safe System of Work (SSoW) to undertake the works they are proposing. This document is intended to provide sufficient product specific guidance on handling, installing, maintaining and removing MGF equipment to allow the SSoW to be compiled. It should always be read in conjunction with the product specific technical files and the site specific design information (including any residual risks to be managed on site) provided by MGF or others.

Users of this equipment should be both familiar with and competent in its use. MGF can provide toolbox talks and training material / advice on request.

MGF excavation systems can be supplied with a full range of site safety products and ancillaries. These products are designed to comply with current best practice and meet the requirements of the Lifting Operations & Lifting Equipment Regulations, Work at Height Regulations and the Confined Spaces Regulations.

For MGF contact details or further information visit www.mgf.ltd.uk

SAFETY TIPS

1. Always inspect lifting points prior to every lifting operation and ensure all personnel are well clear of operation.

2. Beyond 1.0m depth, only access the excavation via a secured ladder placed within the frame. Never enter via the ends/faces of an unsupported excavation at greater depths.

3. Always ensure all pins and retaining clips and bolts and nut assemblies are correctly fitted prior to use.

4. Do not allow personnel to enter the excavation whilst excavator is digging.

5. Always work from a position of safety. Avoid working above on an unsupported edge, an unprotected edge or under a suspended load.

6. Heavy equipment to be installed by competent groundwork contractors only.

7. Use hardwood wedges to ensure all sheet pans are supported squarely by frames.

8. Ensure isolation valve is always closed once legs are pre-loaded.

9. Do not pre-load/pump out hydraulics beyond 1500 psi/100 bar using MGF double acting pump units.

10. Always release hydraulics before removing Tank Brace frames/components.

11. Trench sheets should be handled/pitched/extracted by experienced banksmen ensuring that the trailing strings from the QRS's cannot snag, extractor/QRS pins are fully secured prior to lifting. Great care must be taken to ensure sheets cannot slip, fingers are not trapped and that operatives are always in a position of safety. In windy conditions additional care is required when it is recommended that 2 operatives are used to pitch the sheets.

12. Ensure that driving caps are placed on tops of sheets from a position of safety and cannot be dislodged/fall onto personnel.

13. Always use an extractor for removal of sheets. Do not use QRS's for extraction.

14. SSoW must ensure that the excavator has sufficient access around the perimeter of the sheets to safely drive the sheets and excavate the entire formation area.In addition the perimeter sheets should afford a safe means of entry via a ladder. MGF can supply additional shorter sheets to facilitate the above if required.

15. SSoW must ensure that during assembly, adjustment or removal of Tank Brace frames at least 2 No. evenly distributed points of effective support are provided to each leg. These points of support can be provided by restraining chains, lifting chains or alternatively by packing the legs off formation level.

IF IN DOUBT ASK!

MGF Design Services Ltd
Grant House, Lockett Road
Ashton In Makerfield, Wigan. WN4 8DE
T: 01942 402 704 F: 01942 402 766 E: design@mgf.ltd.uk

Commitment • Innovation • Sustainability

Guidance for Safe Systems of Work: Tank Brace + Sheets

Drawing No.	Rev
GSSW/03.2A	A1

Date of first issue
31.08.12