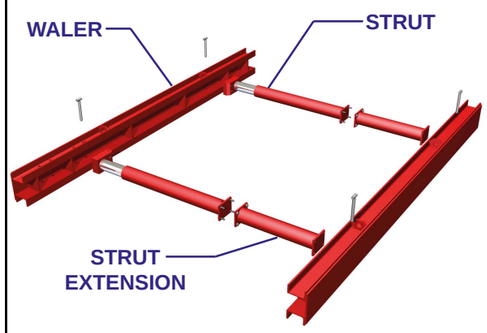

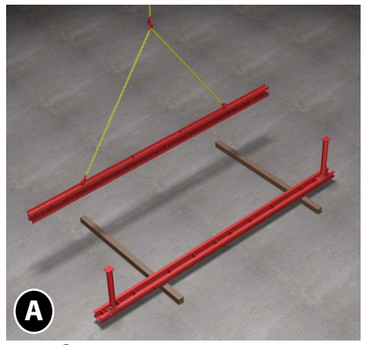

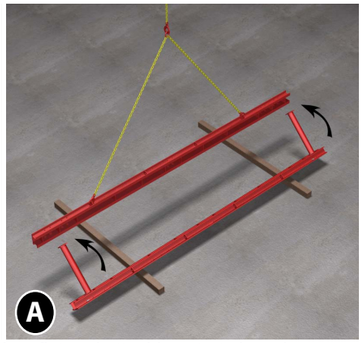

Ⓐ Assemble as shown by laying walers flat and attaching struts in walers using pins and retaining clips provided. If using strut extensions ensure all 4 M10 bolts are fitted and fully tightened



Ⓑ Once assembled pump the struts out to the required width using MGF bucket pump provided (generally trench sheet to sheet dimension -75mm)

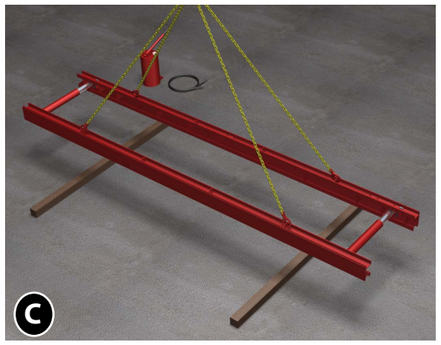

Ⓒ The assembled waler frame is now ready for lifting using MGF 4-leg chains supplied

ASSEMBLY

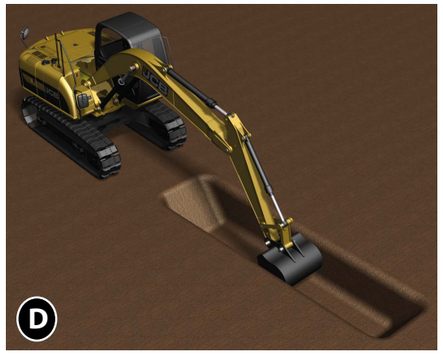

Ⓓ Excavate to max 1.0m below ground level (if site conditions permit)

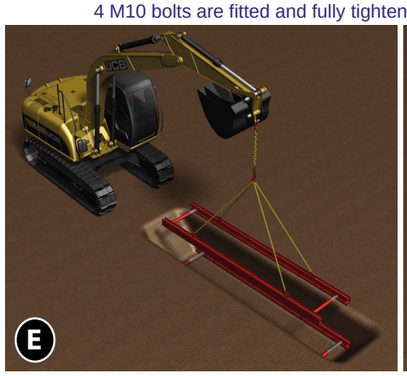

Ⓔ Lower Waler frames into excavation and release 4-leg chains

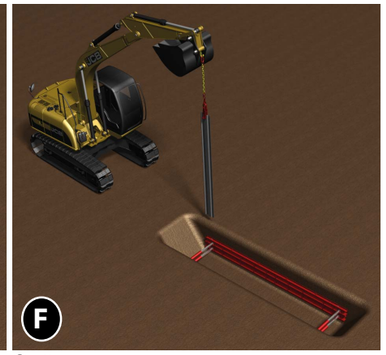

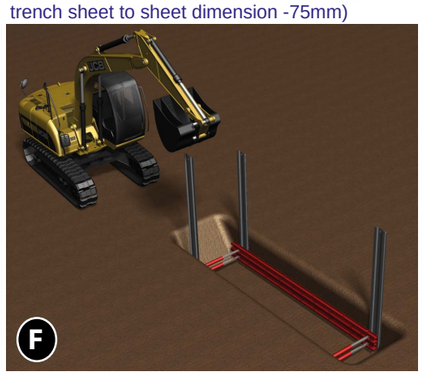

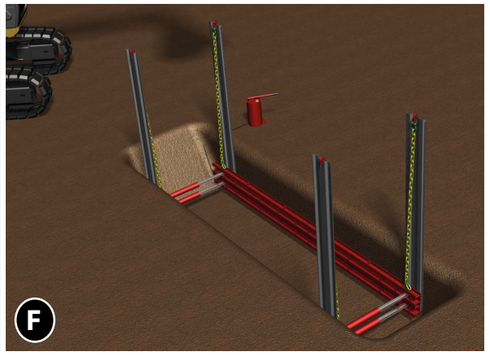

Ⓕ Commence by installing four corner sheets, as shown. Sheets are pitched using an MGF quick release shackle and pushed gently into the trench using the excavator bucket. Sufficient toe (min. 300mm) must be provided to ensure sheets cannot slip or slide. Using a 4-leg lifting chain, position the top frame to the correct level, attach restraining chains and pump out top frame struts to pre-load/restrain the sheets fully. Manual assistance will be required to pitch and release sheets and ensure they are installed plumb/square (no person at any time should stand directly under bucket/sheet or over the edge of the excavation)

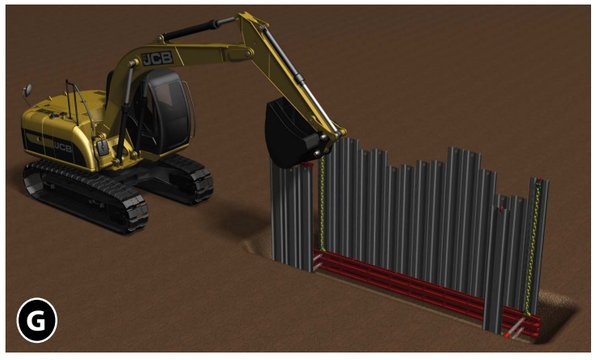

Ⓖ Commence pitching and driving the sheets as far as is practicable without buckling the sheets. Use an MGF driving cap to protect the sheets ends from damage

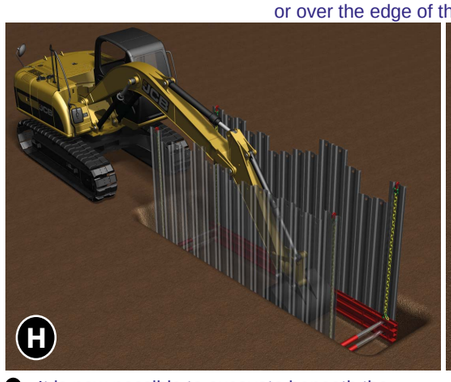

Ⓗ It is now possible to excavate beneath the level of the lower frame to the required level of the next frame. The sheets must be driven ahead of the dig level as work proceeds (and the lower frame dropped as the excavation works progress)

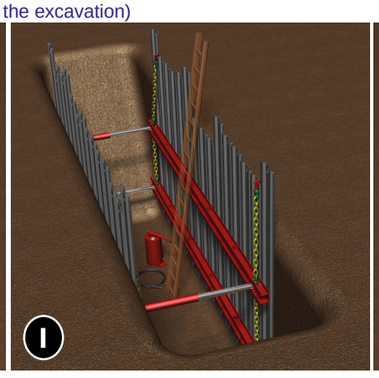

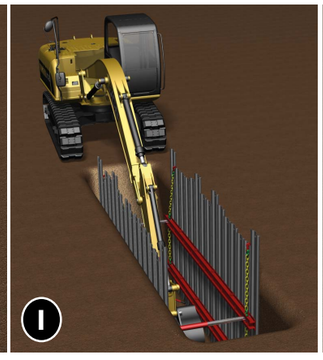

Ⓘ The lower frame can now be pumped out to pre-load the sheets and restraining chains attached. Always ensure a safe, secure means of access is provided prior to entry. Excavation can then proceed to final level

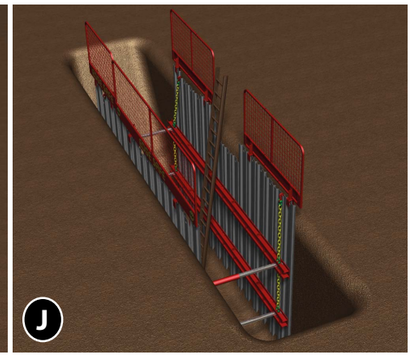

Ⓙ Batter back open ends. Install edge protection and a safe means of access NB. MGF Endsafe panels/struts can be used in lieu of a batter

INSTALLATION



Handling Point Detail

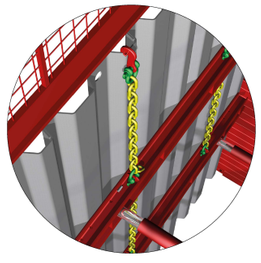

Restraining Chain Connection Detail

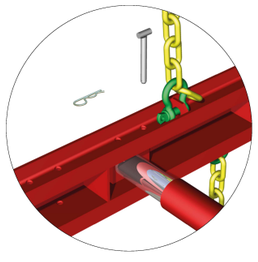

Waler Strut Connection Detail



Waler Strut Extension Connection Detail

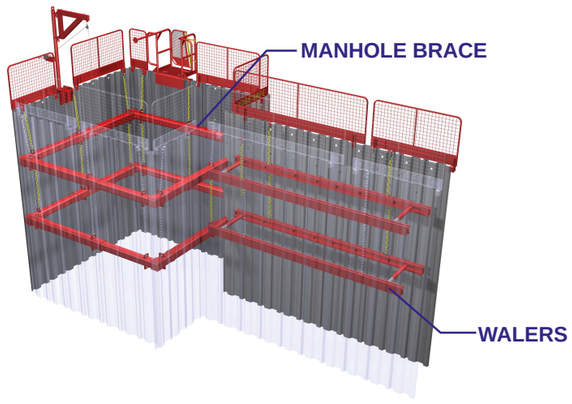

Ⓚ Maintenance

Prior to permitting entry always ensure:-

- Walers are installed plumb, square and level to each other
- All components are fitted and show no signs of damage, distress or fluid/pressure loss
- Safe means of access/egress is provided from within the excavation

Ⓛ Removal

Removal is a reverse of installation ensuring material is backfilled and compacted as extraction proceeds

UNCONTROLLED WHEN PRINTED
go to www.mgf.ltd.uk for latest version

GENERAL

Current health and safety legislation requires that construction equipment users formulate a site specific Safe System of Work (SSoW) to undertake the works they are proposing. This document is intended to provide sufficient product specific guidance on handling, installing, maintaining and removing MGF equipment to allow the SSoW to be compiled. It should always be read in conjunction with the product specific technical files and the site specific design information (including any residual risks to be managed on site) provided by MGF or others.

Users of this equipment should be both familiar with and competent in its use. MGF can provide toolbox talks and training material / advice on request.

MGF excavation systems can be supplied with a full range of site safety products and ancillaries. These products are designed to comply with current best practice and meet the requirements of the Lifting Operations & Lifting Equipment Regulations, Work at Height Regulations and the Confined Spaces Regulations.

For MGF contact details or further information visit www.mgf.ltd.uk

SAFETY TIPS

1. Always inspect lifting points prior to every lifting operation and ensure all personnel are well clear of operation.

2. Beyond 1.0m depth, only access the excavation via a secured ladder placed within the frame. Never enter via the ends/faces of an unsupported excavation at greater depths.

3. Always ensure all pins and retaining clips are correctly fitted prior to use.

4. Do not allow personnel to enter the excavation whilst excavator is digging.

5. Always work from a position of safety. Avoid working above on an unsupported edge, an unprotected edge or under a suspended load.

6. Heavy equipment to be installed by competent groundwork contractors only.

7. Take care to avoid accidently striking struts or using struts for lifting/moving the walers.

8. Ensure waler frame does not lozenge and use hardwood wedges to ensure all sheet pans are supported squarely by walers.

9. Ensure isolation valve is always closed once struts are pre-loaded.

10. Do not pre-load/pump out hydraulics beyond 1500 psi/100 bar using MGF bucket pump.

11. Always release hydraulics before removing waler frame.

12. Trench sheets should be handled, pitched or extracted by experienced banksmen ensuring that the trailing strings from the QRS's cannot snag, extractor/QRS pins are fully secured prior to lifting. Great care must be taken to ensure sheets cannot slip, fingers are not trapped and that operatives are always in a position of safety. In windy conditions additional care is required when it is recommended that 2 persons are used to pitch the sheets.

13. Ensure that driving caps are placed on tops of sheets from a position of safety and cannot be dislodged/fall onto personel.

14. Always use an extactor for removal of sheets. Do not use QRS's for extraction.

15. Do not extend struts beyond their stated working range.

16. SSoW must ensure that the excavator has sufficient access around the perimeter of the sheets to safely drive the sheets and excavate the entire formation area.In addition the perimeter sheets should afford a safe means of entry via a ladder. MGF can supply additional shorter sheets to facilitate the above if required.

17. SSoW must ensure that during assembly, adjustment or removal of Waler frames at least 4 No. evenly distributed points of effective support are provided to a fully assembled frame. If any of the struts are disconnected whilst the frame is suspended at least 2 No. points per waler will be required. These points of support can be provided by restraining chains, lifting chains or alternatively by packing the walers off formation level.

IF IN DOUBT ASK!

MGF Design Services Ltd
Grant House, Lockett Road
Ashton In Makerfield, Wigan, WN4 8DE
T: 01942 402 704 F: 01942 402 766 E: design@mgf.ltd.uk

Commitment • Innovation • Sustainability

Guidance for Safe Systems of Work: Sheets and Walers

Drawing No.	Rev
GSSW/05.3A	A1

Date of first issue
06.03.12