

Hirepool Shoring (HPS) LTD

KS100 SAFE OPERATING PROCEDURES

Trench shoring systems provide a means for you to undertake pipeline installation work quickly and safely. Following the guidelines outlined in this publication will help you to achieve this.

The KS100 shoring system is designed and manufactured for safe use within the parameters of these procedures. This Safe Operating Procedures covers the loading, unloading, assembly and operation of the KS100 shoring system.

This Safe Operating Procedure has been reviewed by The Department of Labour. They have advised their construction inspectors that this trench shoring is very good and should be used where possible.

Safety

Lifting, handling, pulling, dragging

Always lift from the lifting points, using certified chains. Never lift from struts.

Handling should be carried out as close to the ground as possible.

Lifting chains must be chosen to suit the weight being handled and must be certified.

To prevent the accidental detachment of the load use only load hooks with safety catches.

The load must be slung in such a way that the shoring is kept in a horizontal position and swinging is kept to a minimum. Use a tag line to control the movement of gear.

Do not stand within the pivoting range of the excavator or crane or beneath suspended loads.

A load operator must stand to the front of the excavator and be in eye contact with the machine operator.

Checklist:

- Am I trained for the task?
- Am I wearing the correct PPE (Personal Protective Equipment) for this task?
- Do I require assistance from a licensed machinery operator- eg cranes?
- Do I have the correct tools for the task?
- What are the safety devices being used on site – eg chains etc?
- Is the work area cleared of debris, tools etc?

TSNZ recommends a minimum of a 12tonne machine for 2.4m deep and any deeper a minimum of a 20 tonne Machine.

Weights are not stamped on our equipment, these weights are provided on the packing list provided with the equipment as weights can vary depending on the order.

Measures to reduce hazards

The safety of persons on site is paramount and should be enhanced with the aid of appropriate signs, cones, warning tapes and safety staff trained and deployed for the purpose of preventing accidents.

The risk of instability as a consequence of wind loads when setting up or using shoring must be considered.

Shoring must be secured against accidental impacts and set up in an area of sufficient size and on firm ground.

Care must be taken to look out for and avoid contact with overhead cables when handling, installing and removing shoring.

Where the ground is sloping or uneven, the shoring should be set up, if possible, at right angles to the slope.

Damages on site

The contractor must notify TSNZ of any damage ASAP; TSNZ will assess the damage and advise whether it is safe to continue using the item. Repairs must be carried out by TSNZ or carried out by another party only when in authorised in writing by TSNZ.

Loadings

Ensure that the loadings don't exceed the Limit State Design load for the system, which for the KS100 4m Long Box is 44.6kNm² and the KS100 2.5m Long Box is 78kNm²

Step 1,

Lay the first panel on flat even ground with the channel facing up.



Step 2,

Put 4 x Mushrooms into the channels as shown

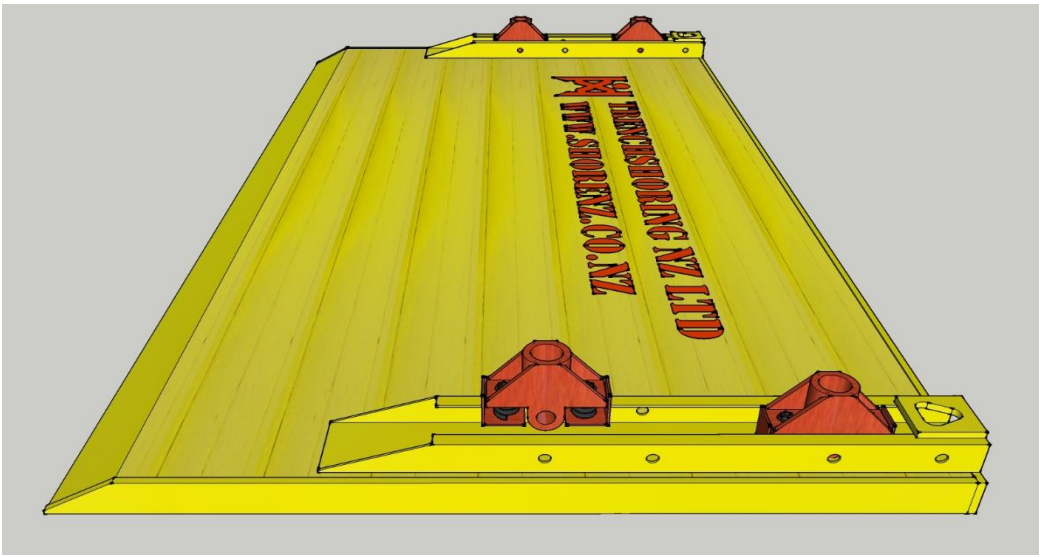

Step 3,

Put 40mm pins through channels and mushroom, secure with clips provided

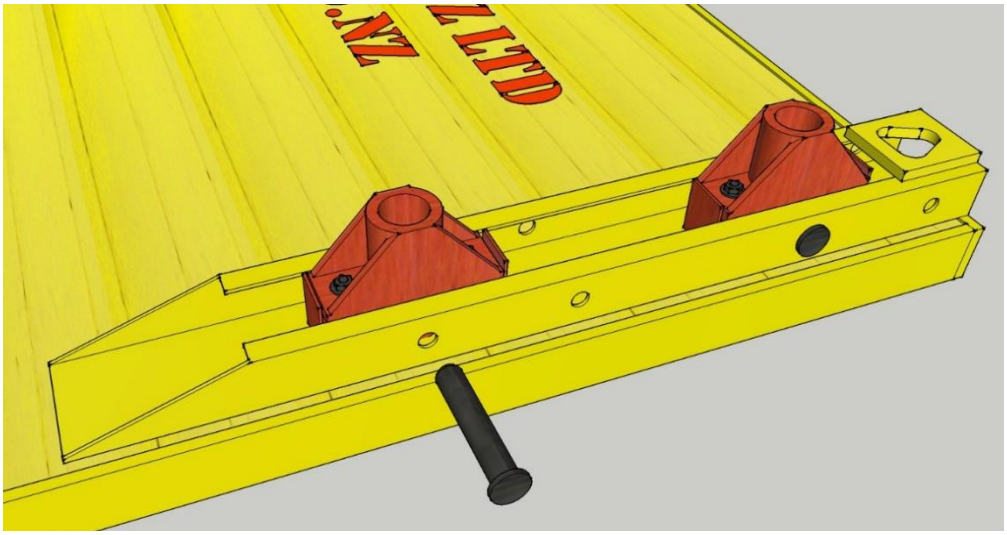

Step 4,

Put 4 x Struts into the mushrooms as shown

Ensure that both threads at each end of the struts are the same length

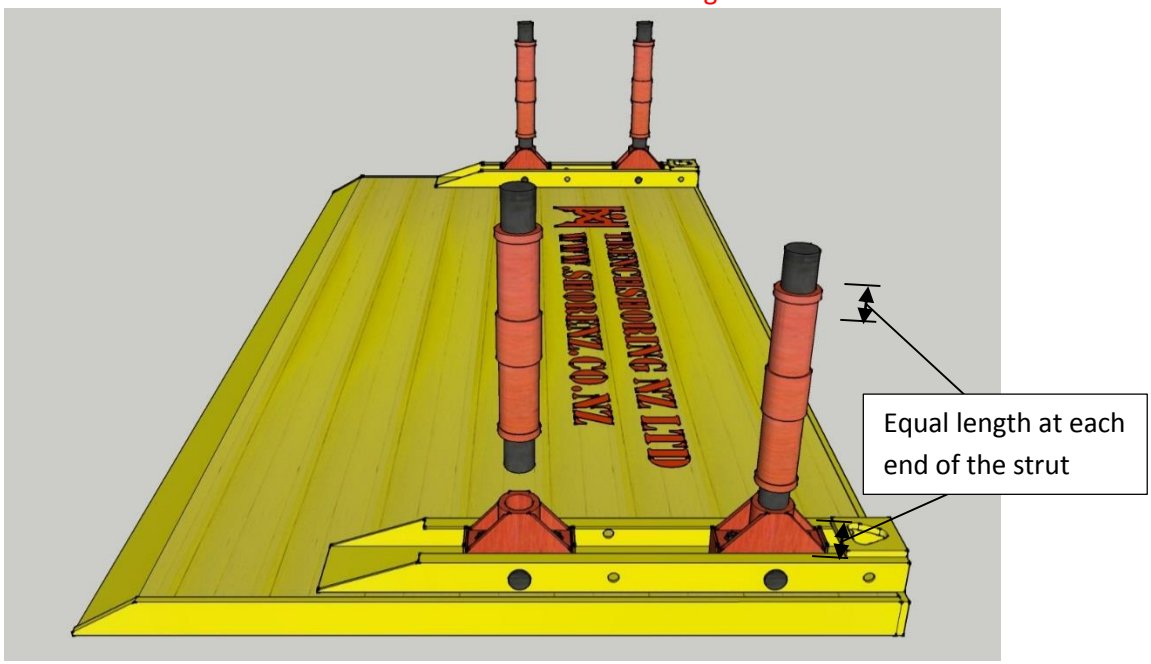

Hint – Line up the holes within the strut and mushroom before placing the strut within the mushroom

Step 5,

Put 20mm pins through mushroom and strut, secure with clips provided. 20mm pins should always go in from the top side of the panel

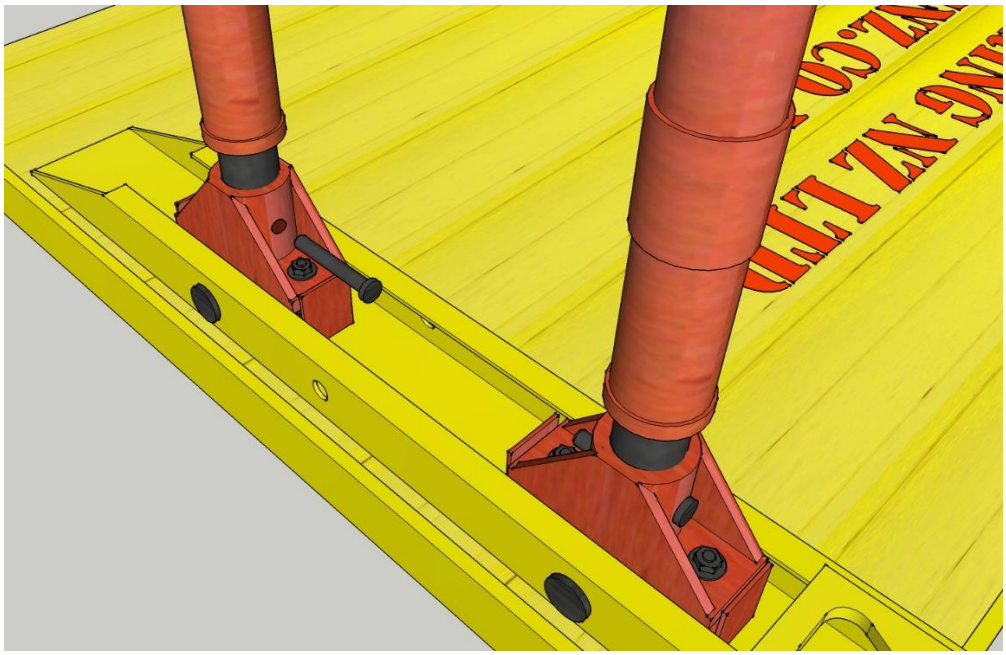

Step 6,

Place mushrooms on to the open end of the struts, securing them with 20mm pins and clips as per Step 5. If a different width is required for the trench box, TSNZ will supply 500mm or 1000mm struts extensions to achieve this. These are to be added, using 20mm pins and clips, prior to the mushrooms being placed.

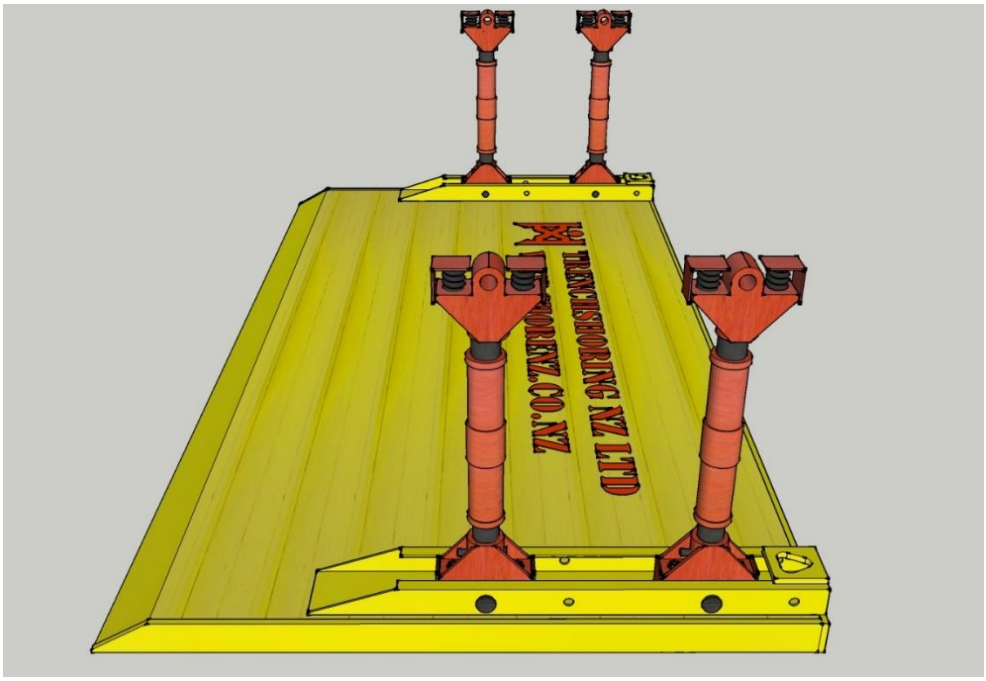

Step 7,

Lift up the 2nd panel and place it so it sits above the mushrooms. Drop the panel on to the mushrooms, struts have a lot of play to line up. It helps to have a person on each end of the box to line up.

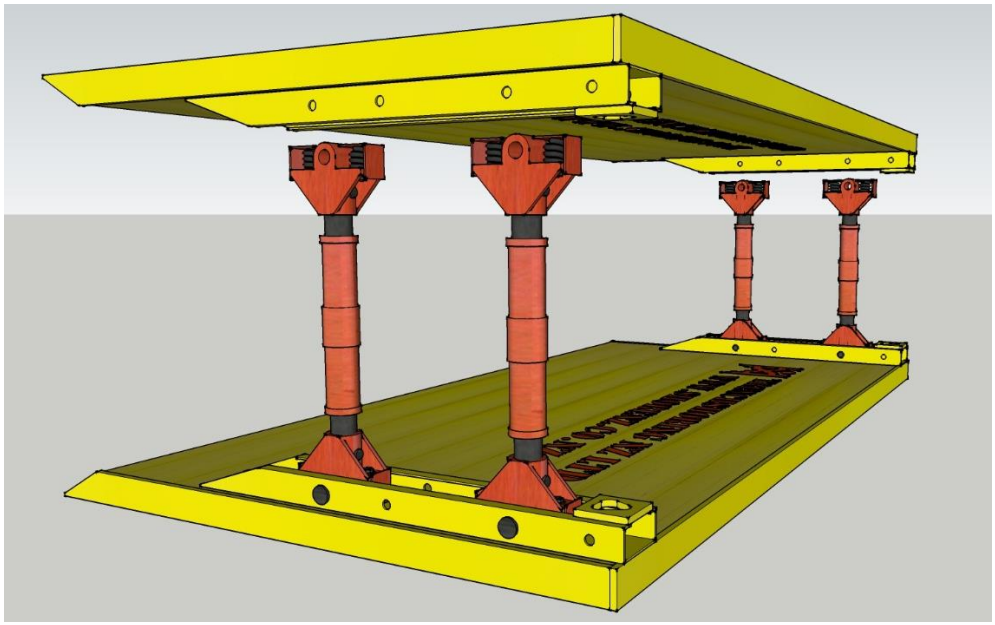

Once all mushrooms are within the channel and lines up put 40mm pins through the channel and mushrooms as per Step 3.

Step 8,
Using certified chains attached to the lifting points, roll the box onto its bottom edges ready for install. Never lift from the struts.

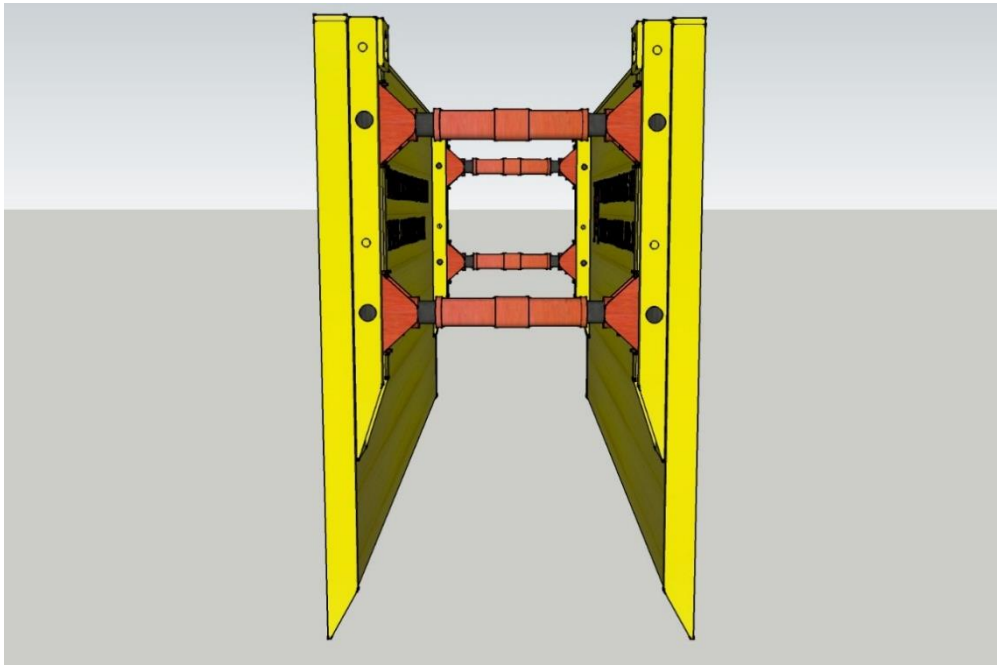

Step 9,
Prior to placing the made up KS100 base box into the trench wind out the lower struts approx. 1 turn more than the upper ones. Alternatively, turn top and bottom struts a turn at a time to move them evenly and prevent jamming. This can be achieved by placing a suitable size and strength bar through the hole in the centre of the strut and rotating in the direction indicated on the strut. One full revolution should suffice.

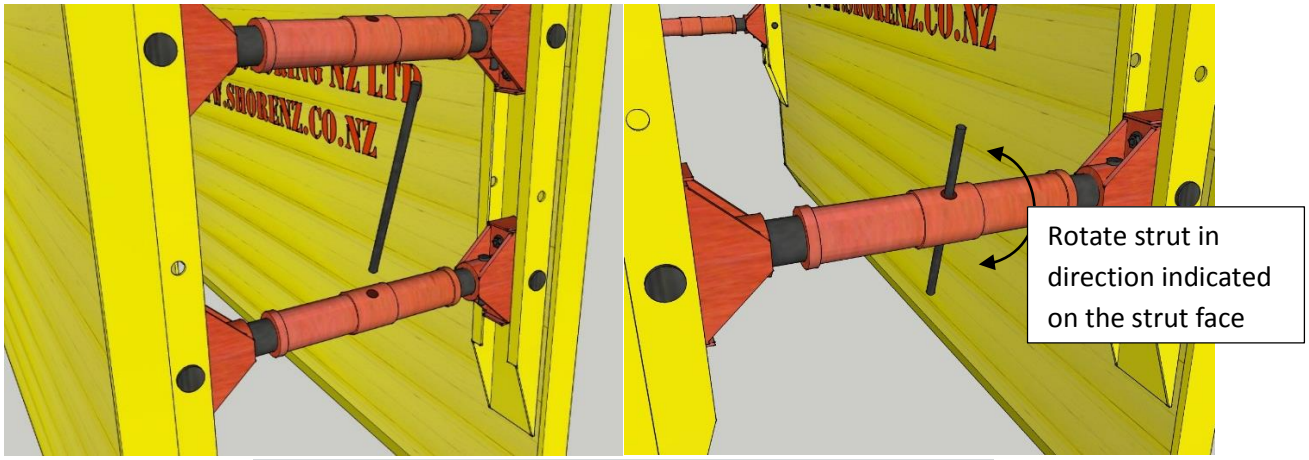

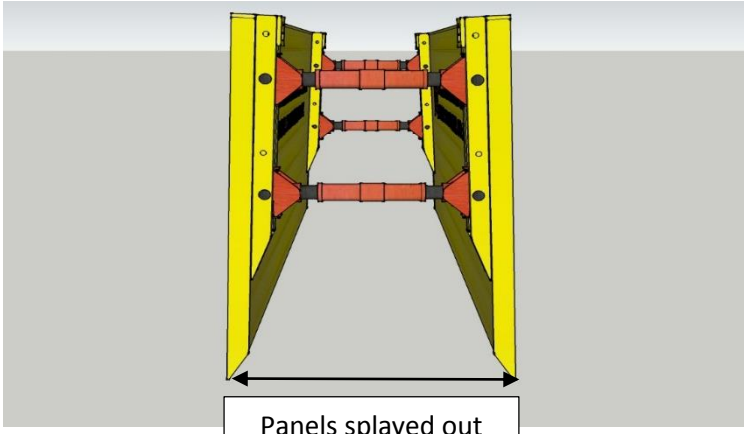

Step 10,
For deeper trenches a top box may be required. The top box is assembled in the same manner as the base box with the exceptions that only 2 struts are required and the base of the box does not need to be splayed out.

Once the top box is assembled it will need to be connected to the base box.

The first step will be to place the connector piece into the base of channel in the Top Box, securing it with a 40mm pin and safety clip.

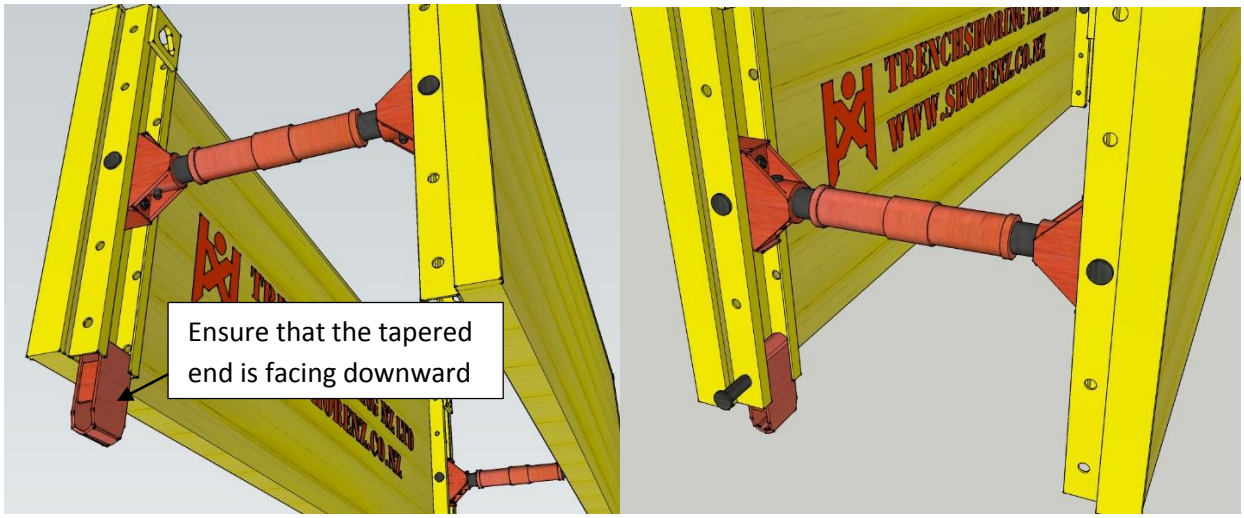

Step 11,
Once all four connecting piece have been positioned and pinned into the top box channel, the top box may then be moved into position to start connection to the base box.

Ensure that the width of the top box is the same as the base box.

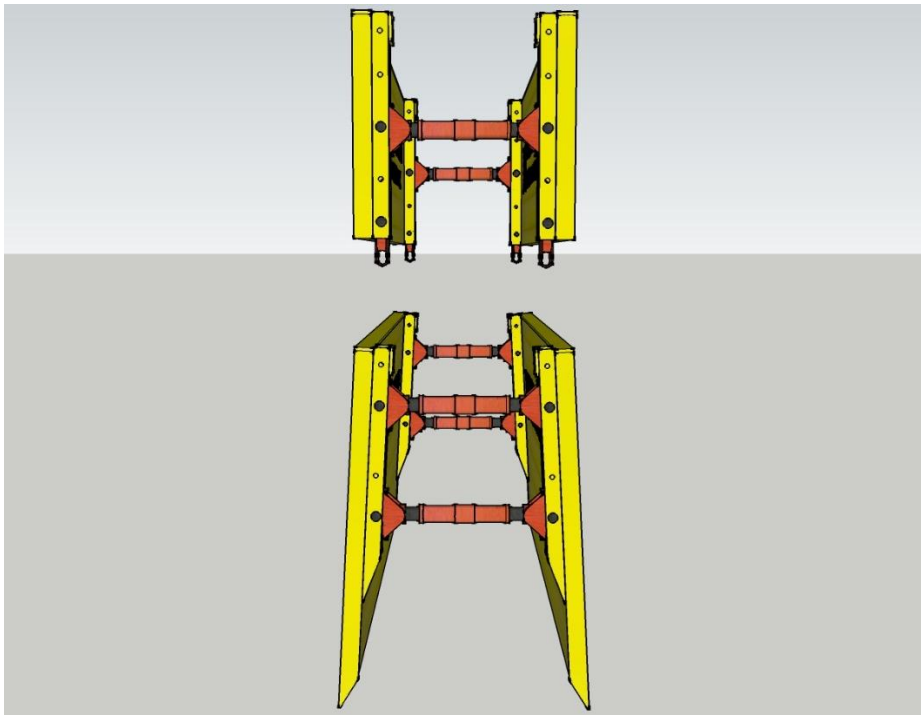

Step 12,

Start by positioning and connecting one side of the top box first

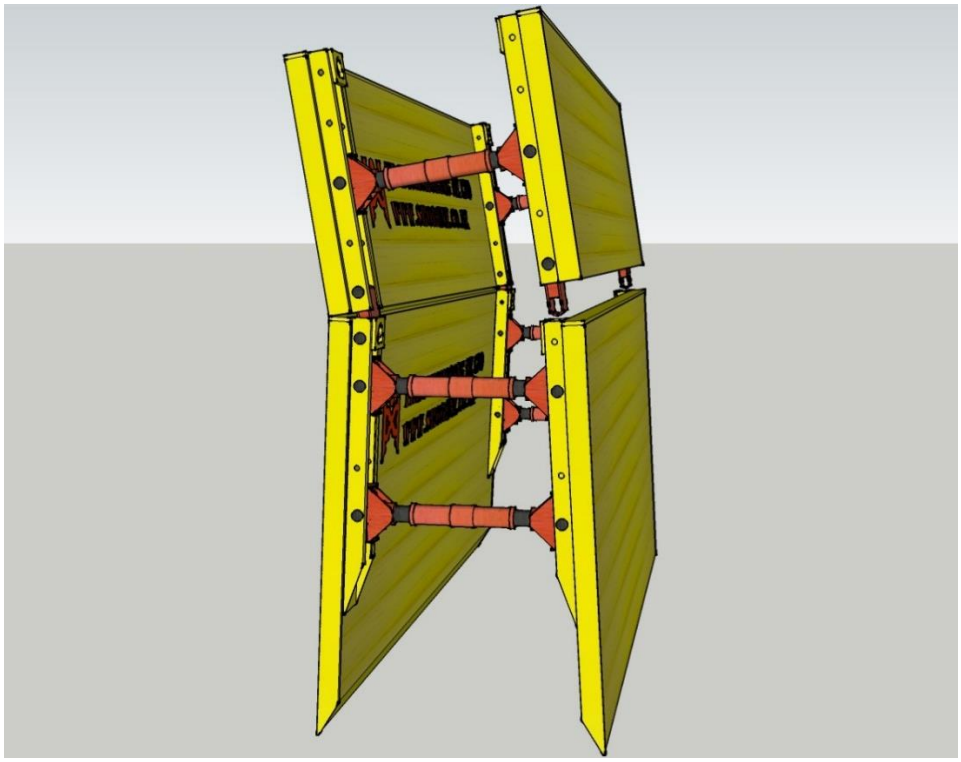

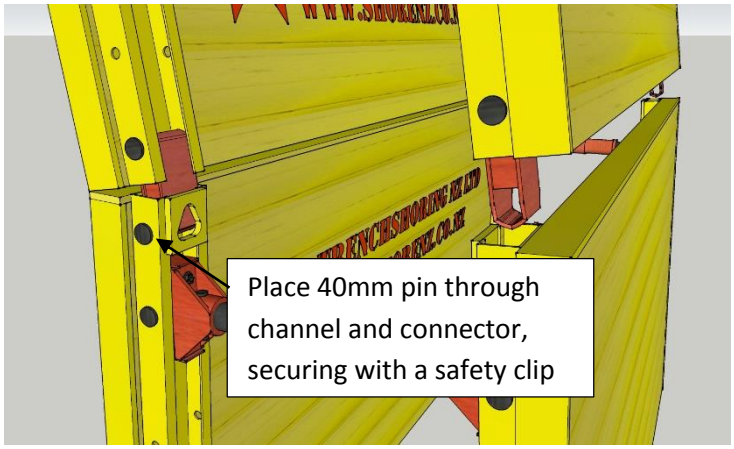

Follow this by connecting the other side of the top box to the base box by using the same process.

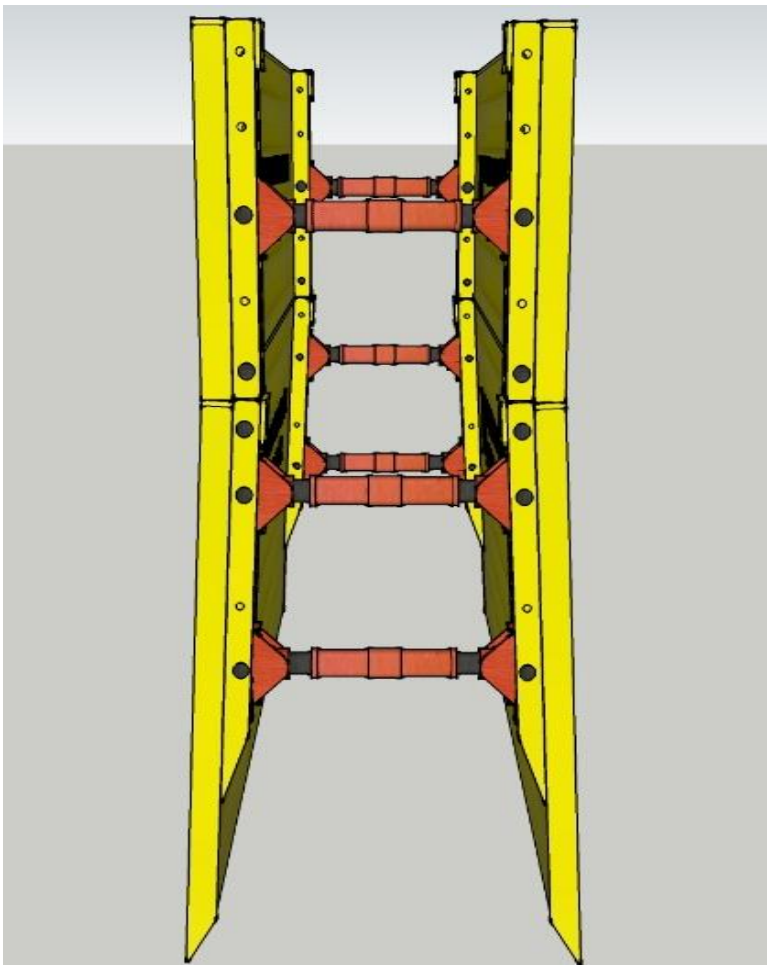

Manhole box

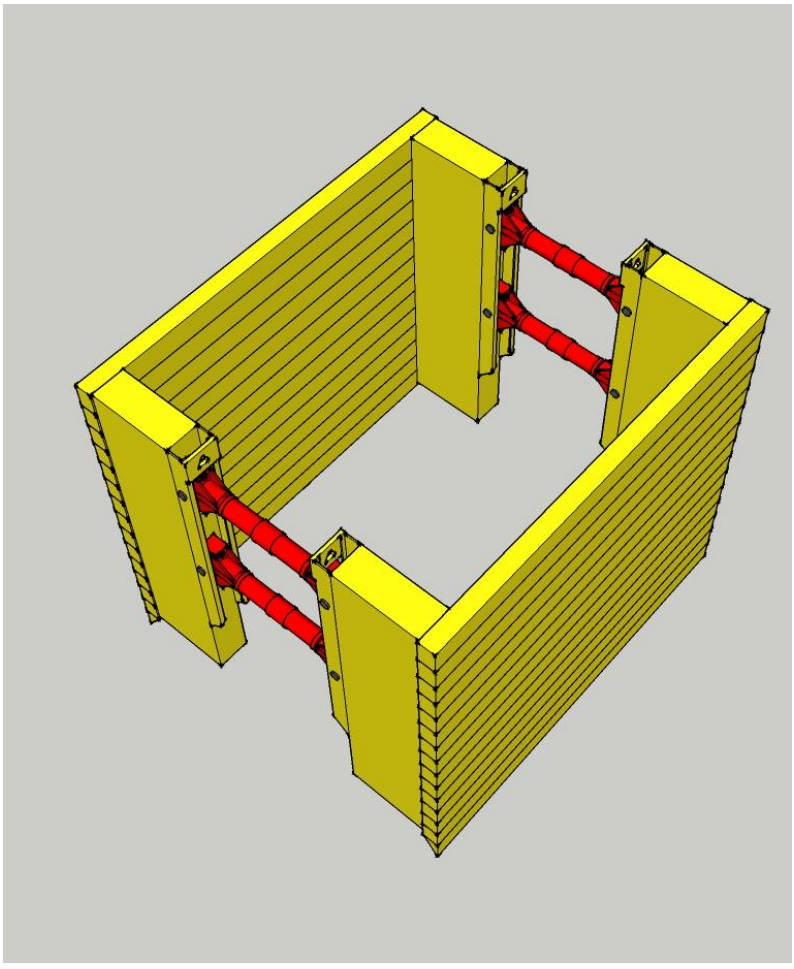

Installing the KS100 system using the dig and push method efficently

This method uses positive pressure the whole way down eliminating undermining behind shields, reducing cut to waste and backfill costs. Also prevents damages to adjacent services and buildings.

This method also allows the shields to be above the backfill/ bedding at all times which reduces point loading of pipes and allows backfilling against virgin ground rather than panels. We recommend that the shoring be 300- 500mm off the bottom to allow for bedding to be spread and compacted

It is proven fast and efficient, we have worked with a crew which laid up to 8 x 1050mm concrete pipes at 2.5m deep in a day vs 3 with a drag shield by the crew around the corner, they had a 1m wider trench than ours due to undermining.

TSNZ is happy to provide a specialist to give onsite guidance or training to become efficient in this method.

THE INSTALL PROCESS

Step 1,
Dig out a hole no more than 500mm deep and to the outside width and length of the shoring.

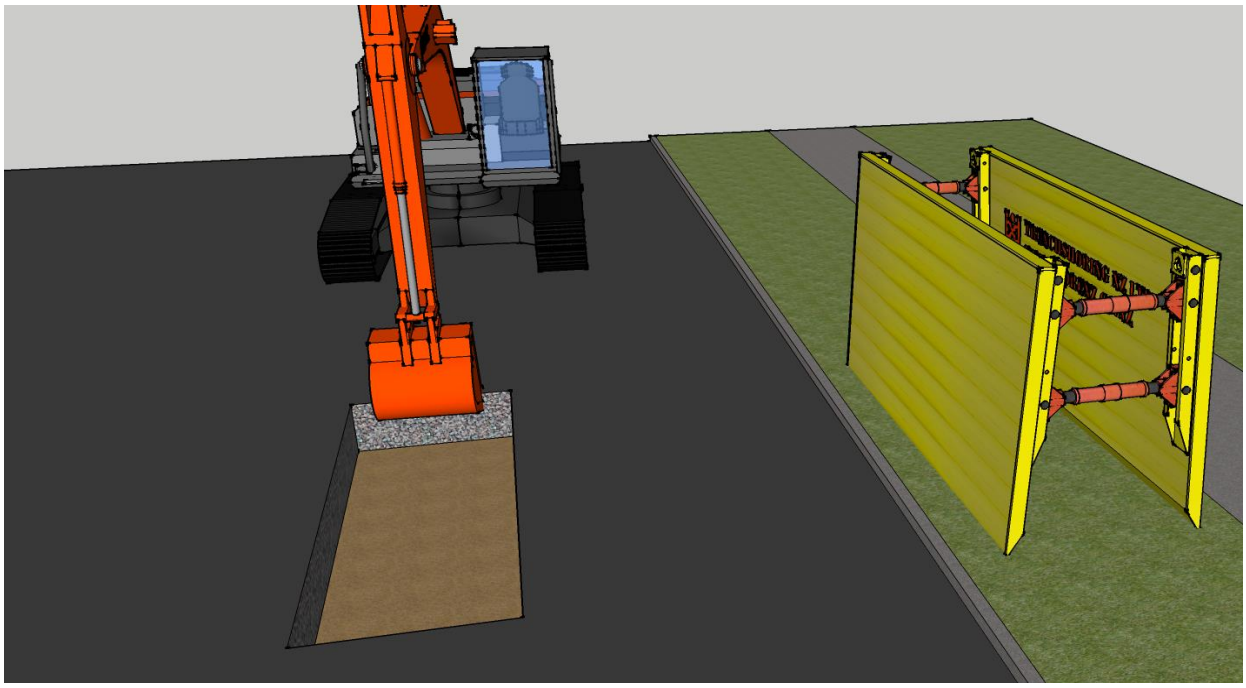

Step 2,

Place the shoring unit into the hole; make sure the bottom spindle is wound out at least 1 turn more than the top on (approx. 50mm wider at bottom than top)

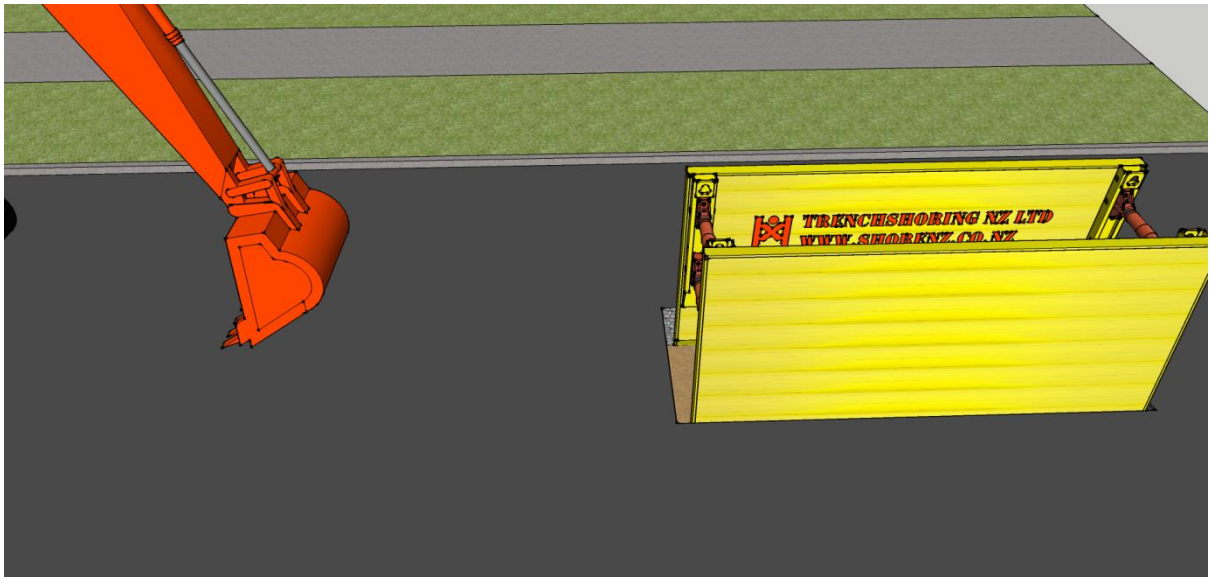

Step 3,

Dig out inside the shield 300mm deep

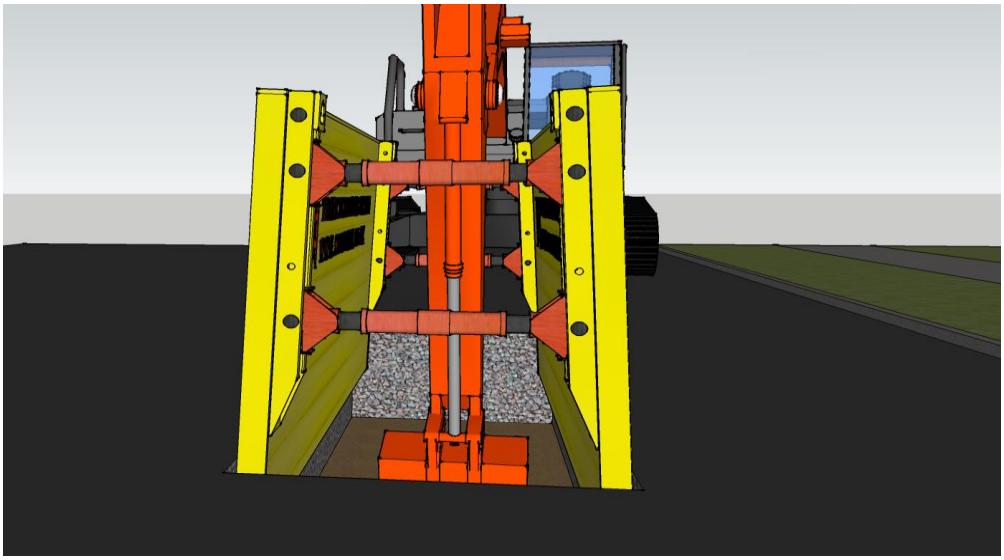

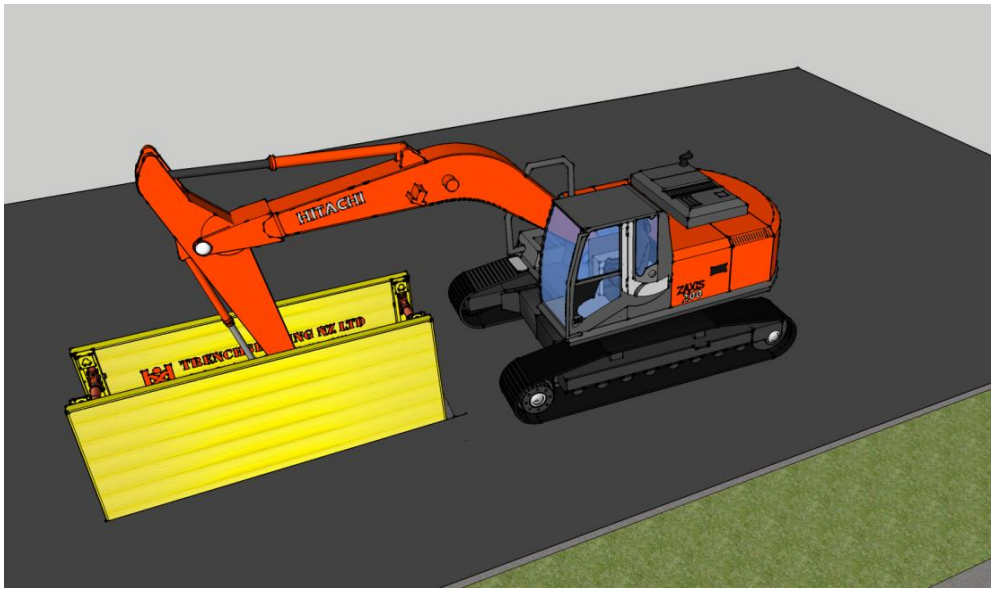

Step 4,
Push down on each corner using a full bucket as per the following images

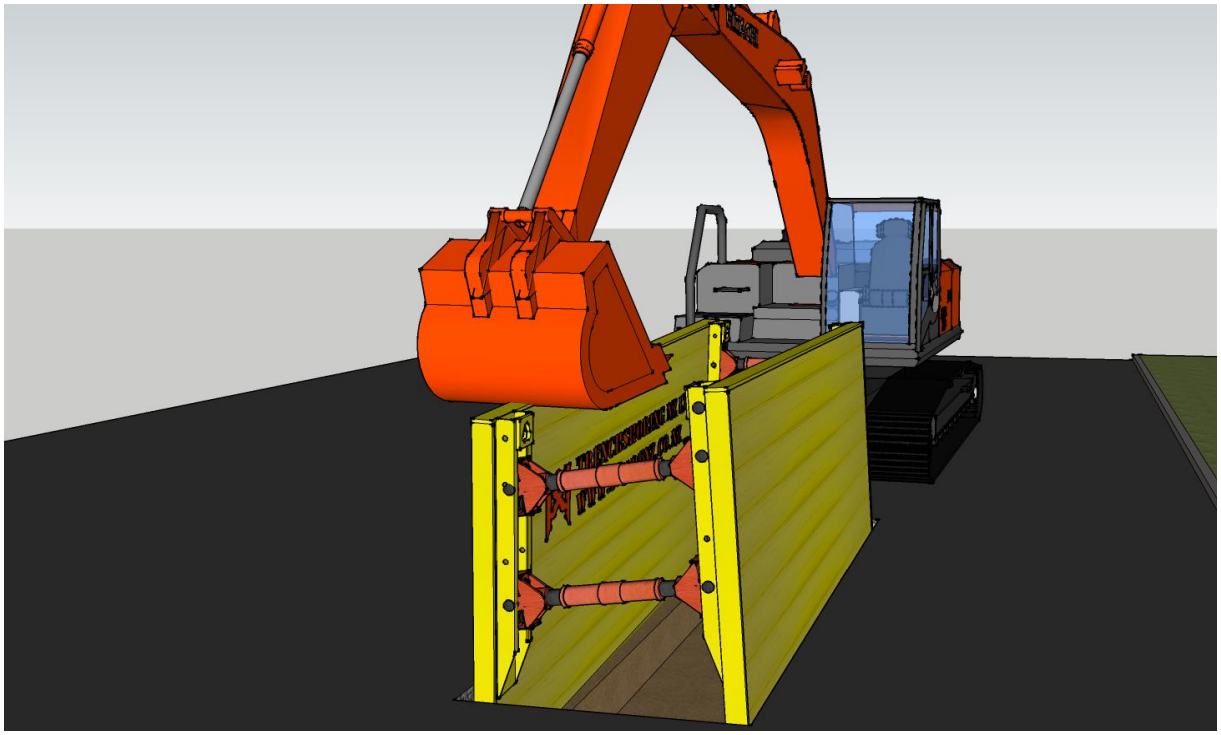

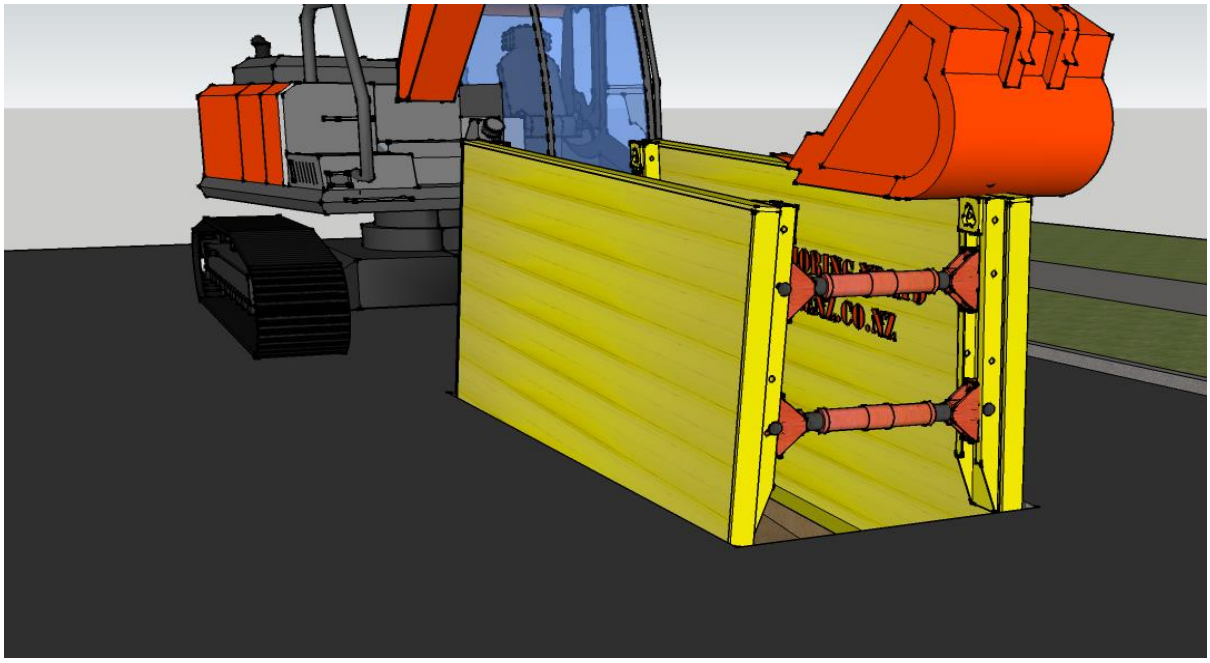

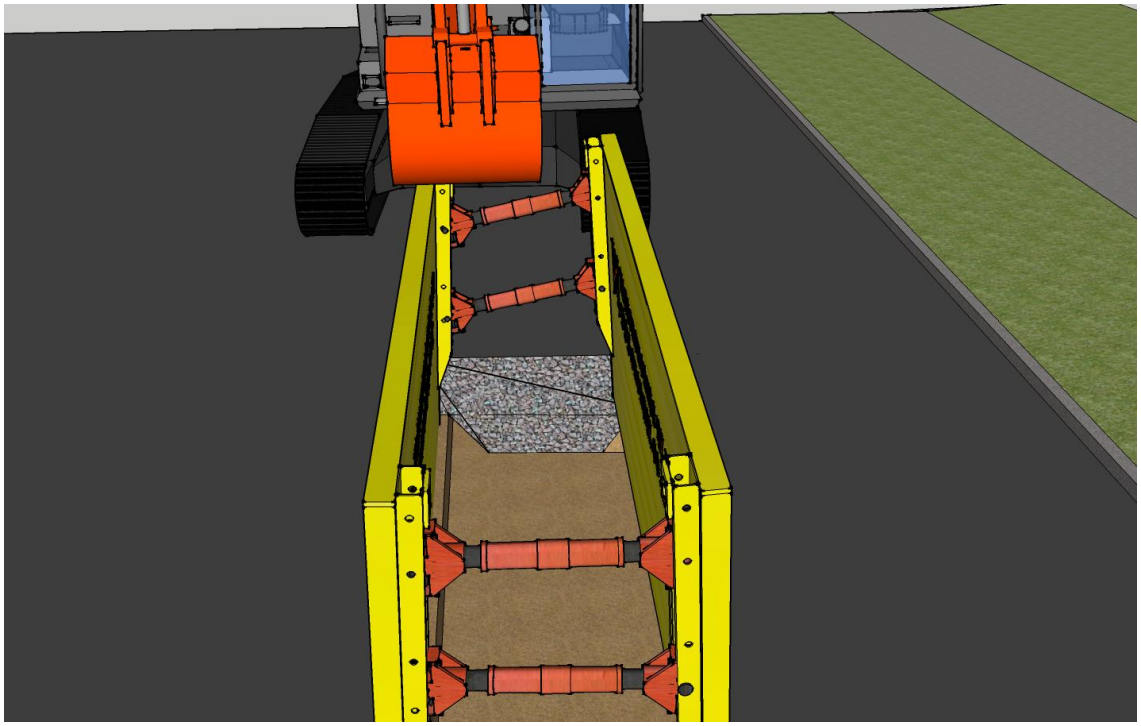

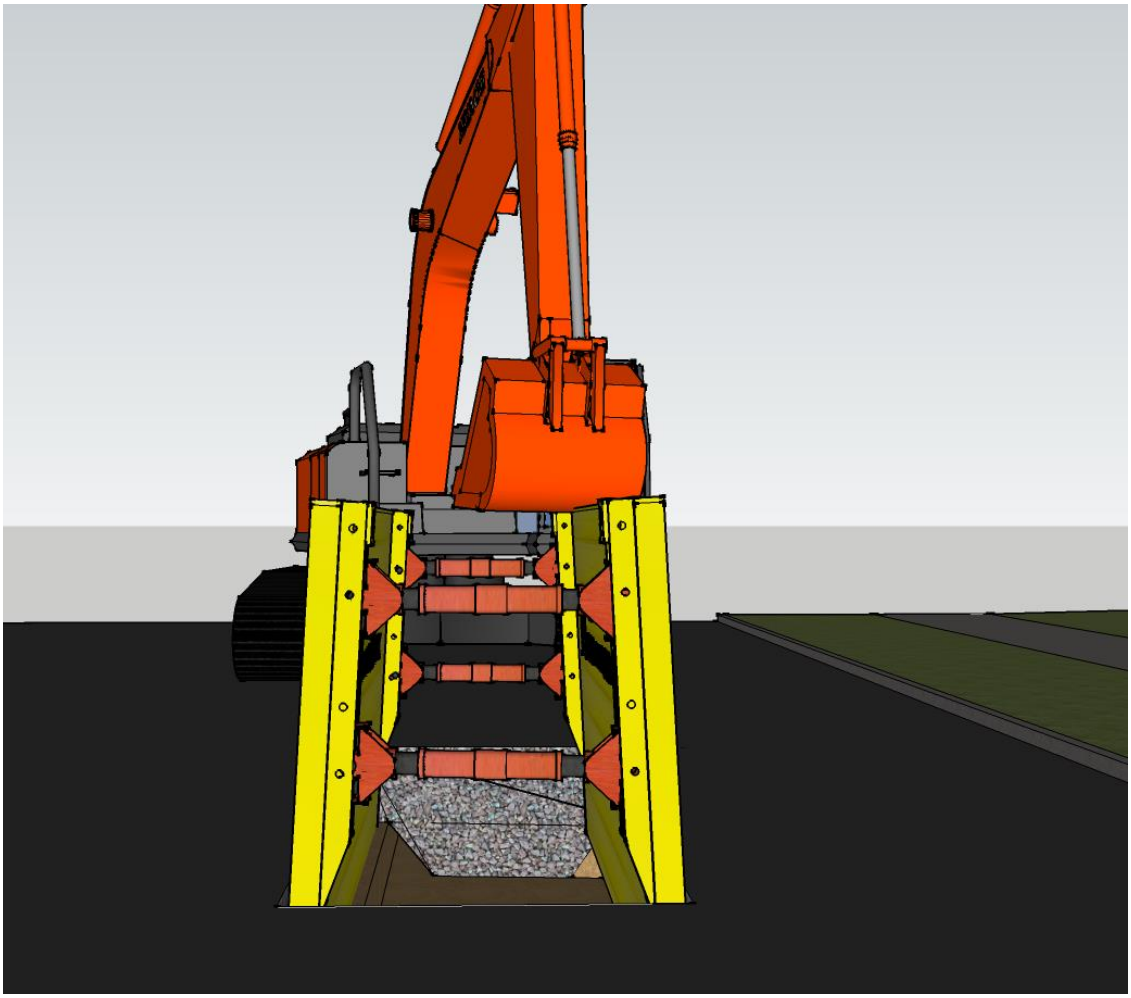

Step 5,

Dig out on the inside again 300mm down. The most common time factor is the trucks either not enough trucks or the turnaround time is too great.

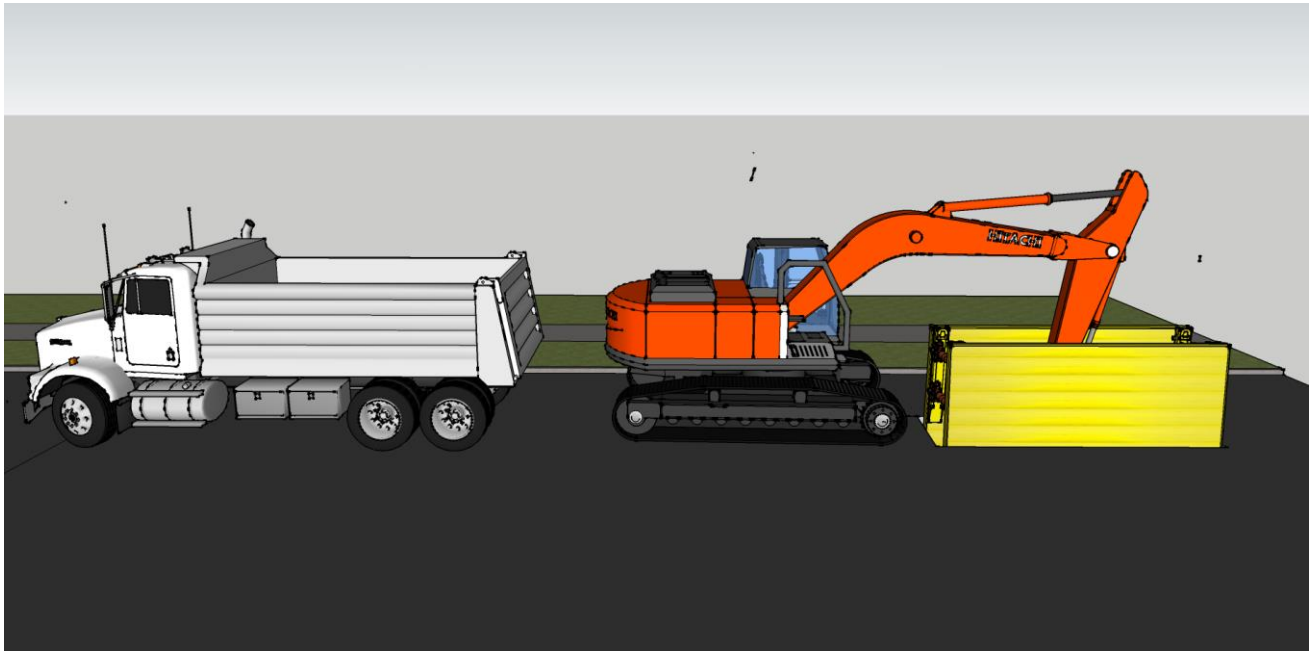

Step 6,

Push on each corner as per step 4

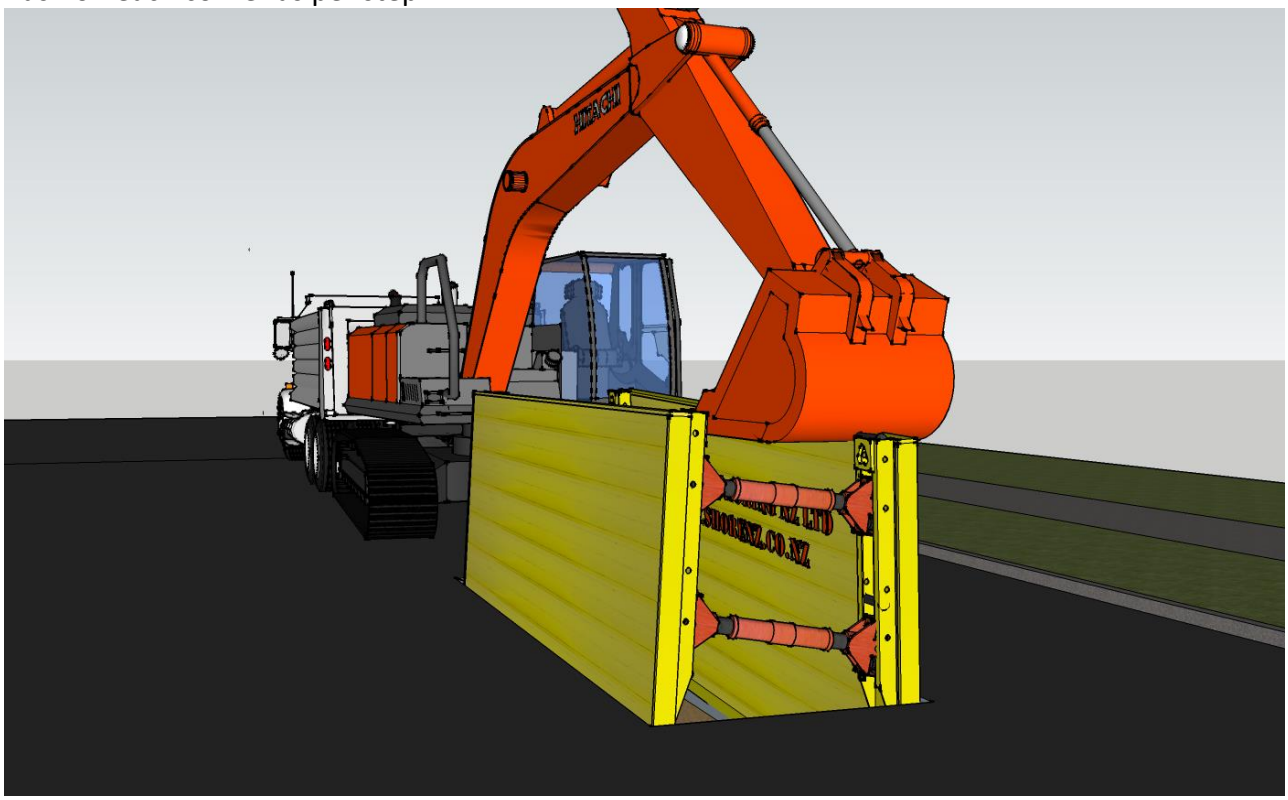

Step 7,
Repeat steps 3 and 4 until the unit is down to depth. If a top box is needed this can be placed on now. Leave the bottom of the shoring off the bottom 300 – 500mm by doing so you allow bedding to be consistent against the virgin soil reducing any point loading on your pipe.

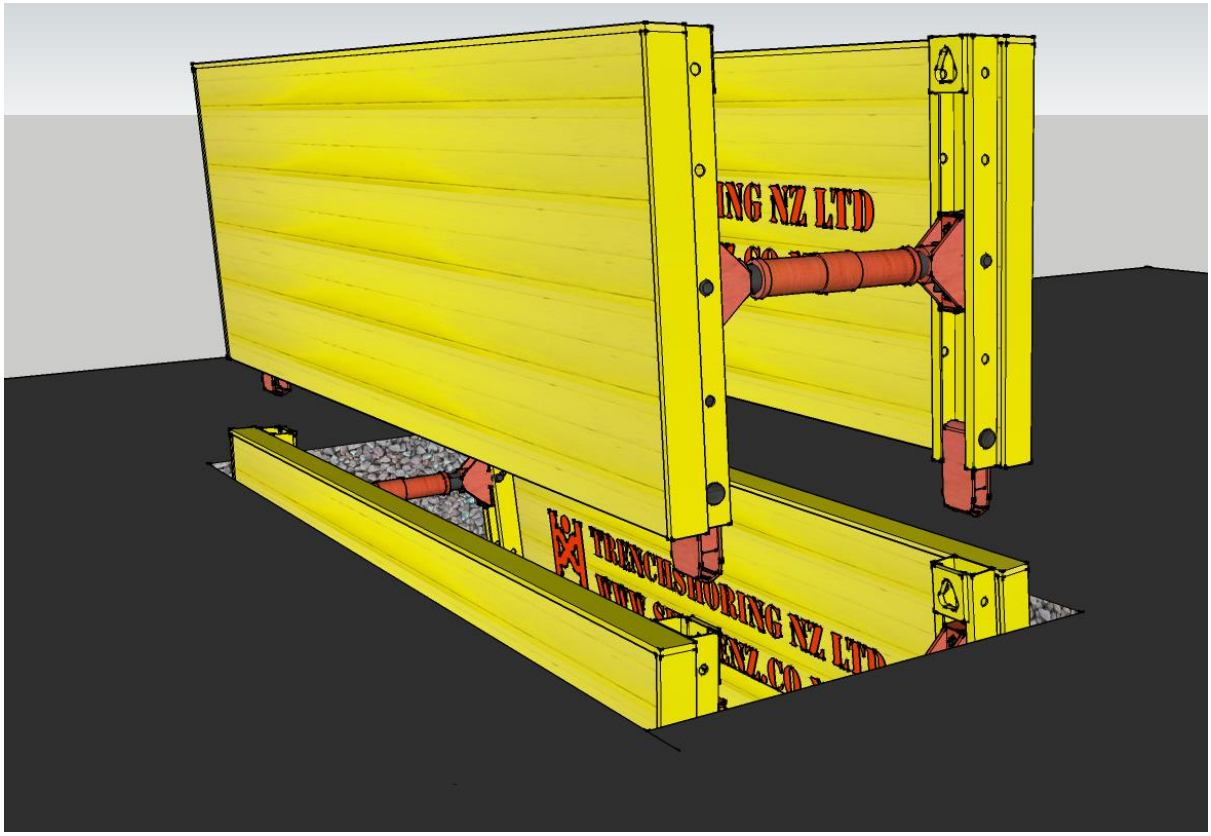

- Once this unit is in repeat the process with the 2nd unit. We recommend 2 units minimum be used for increased productivity and safety.
- This method provides positive pressure the whole way down, completely eliminating any undermining that is common with the use of standard shields or drag boxes.

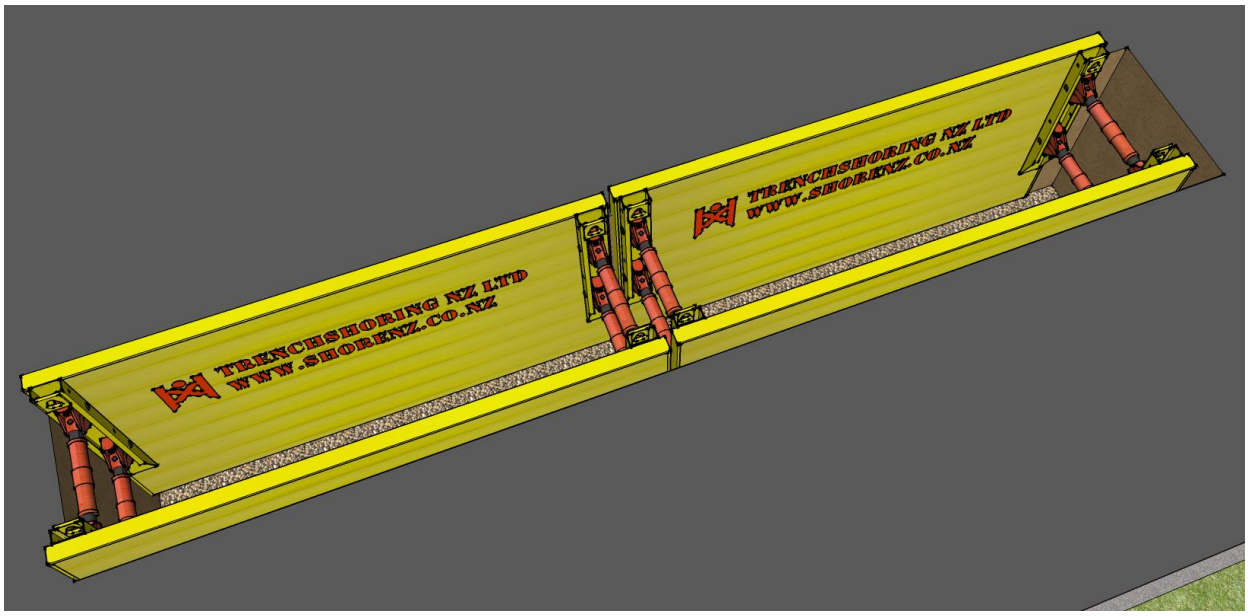

THE BACKFILL PROCESS

- This method of extraction and backfilling means that you are compacting against the ground rather than the shield eliminating the void created when you lift the shoring up.
- There is positive pressure all of the way up until it is safe to remove the shoring.

Using a set of 4 legged lifting chains, hook onto the 4 lifting points and lift the unit up 300mm depending on backfill layer requirements. This achieved by a side to side motion not a straight up pull, rock the excavator left and right. This process is the reverse of the install method.

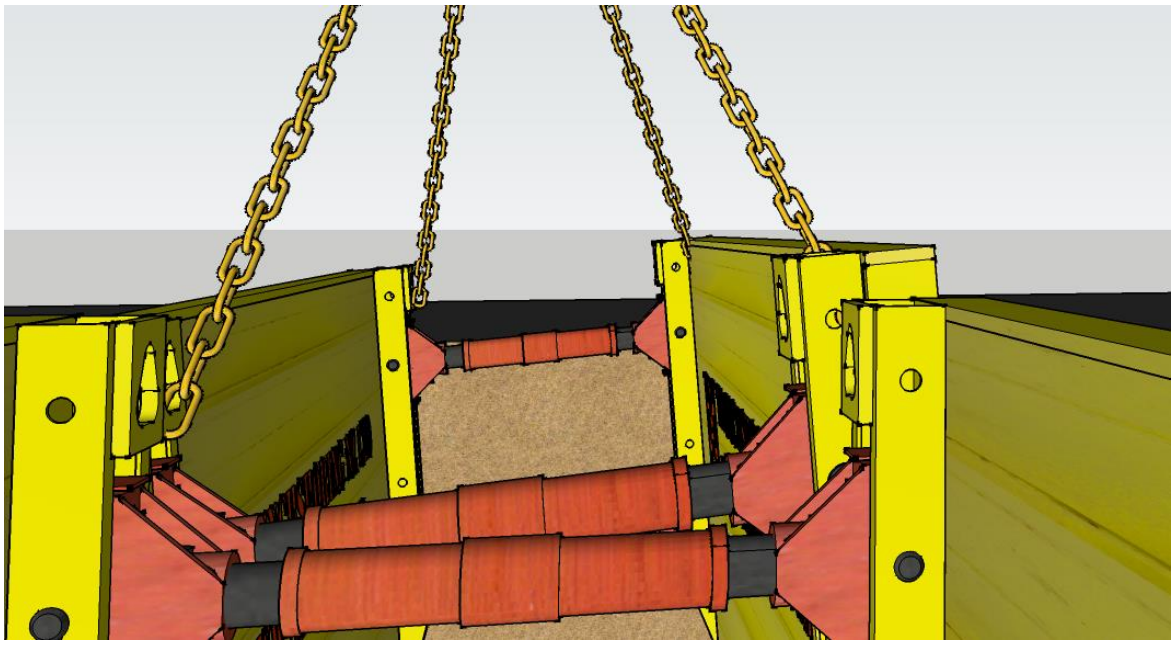

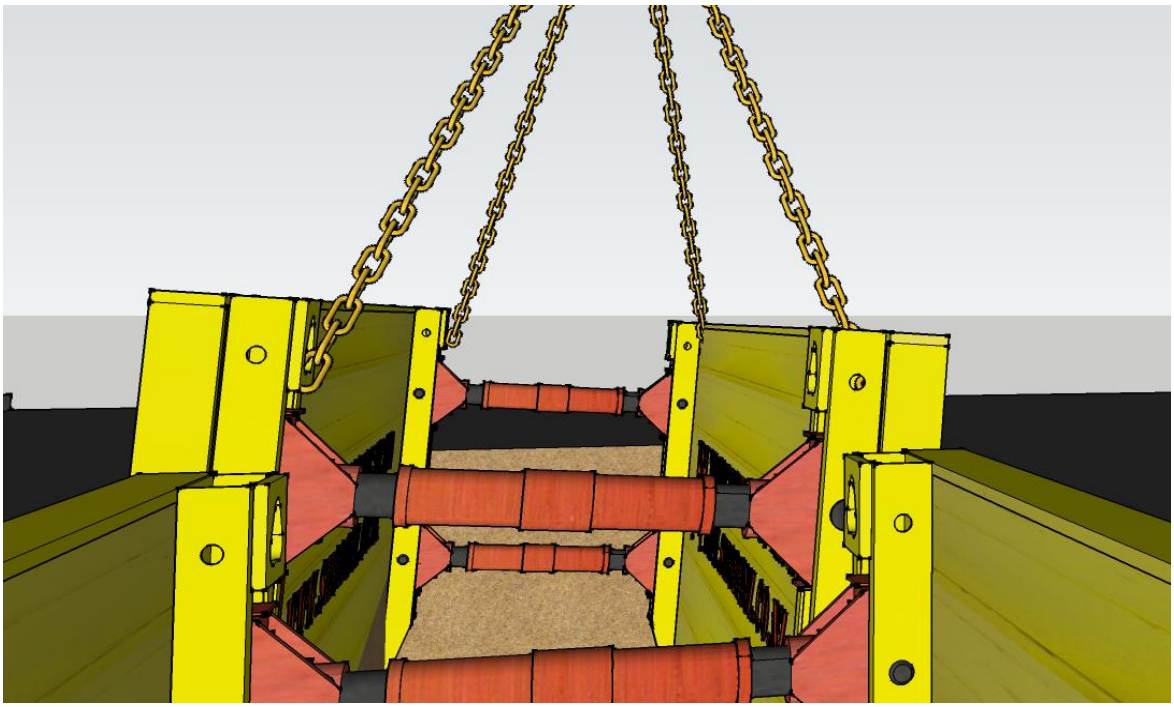

- Once you have lifted the shoring to the desired height you can remove the chains and it will stay in place due to the positive pressure.
- Backfill up to the bottom of the panels against the soil rather than the panels
- Continue this process until the shield can safely be removed
- Move the extracted shield to the front and install using the dig and push method leap frogging the shields down the road